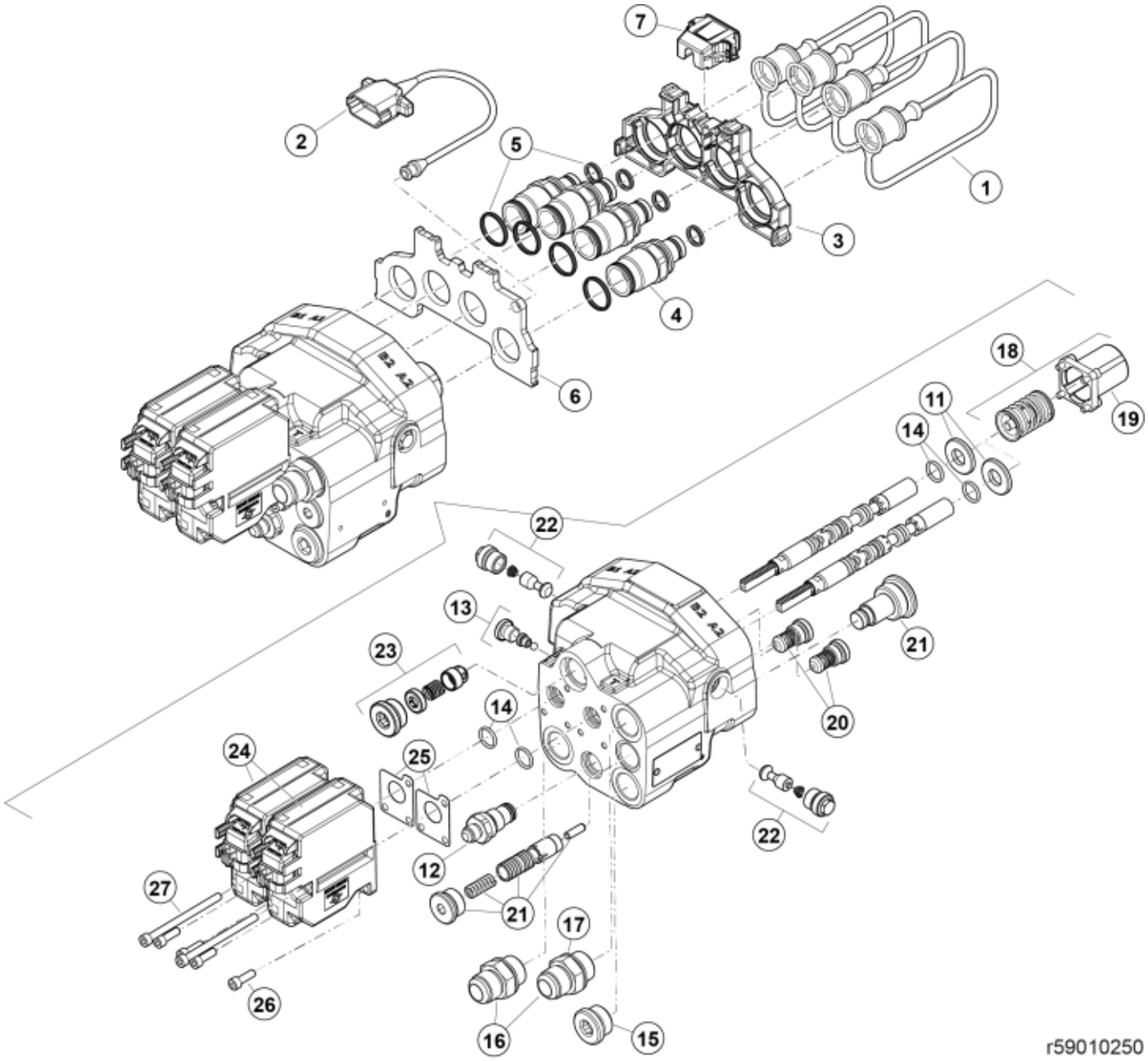
7
2
5
1
3
4
6
18
19
11
14
22
13
21
23
20
14
24
25
22
12
21
27
17
26
16
15
r59010250


© 2025 Jost

| | |
|---|---|
| **Part assemblies** | QE Valve SF4 LS |
| **Specification** | Specification: Load sensing |

| PartNo | Pos | Qty | Name | Specifications |
|---|---|---|---|---|
| 59021030 | 1 | 4 | Dust Cover | |
| 59021031 | 2 | 1 | Dust Cover | |
| 59021024 | 3 | 1 | Cover | |
| 59021040 | 4 | 4 | Coupling | |
| 59021044 | 5 | 1 | Seal kit | for coupling/adaptor (supplied in bags of 10) |
| 59021010 | 6 | 1 | Cover plate | 4 ports |
| 59021025 | 7 | 1 | Connector Support | |
| 5034344 | 11 | 2 | Washer | 16 x 34 x 4 |
| 59018011 | 12 | 1 PCS | LS connection | 9/16 JIC |
| 59018003 | 13 | 1 PCS | Shuttle valve | |
| 5034349 | 14 | 4 | O-ring | 15,88 x 2,62 |
| 5028081 | 15 | 1 PCS | Plug | R 3/4" |
| 5027463 | 16 | 2 | Adaptor | 3/4" BSP-1 1/16" JIC |
| 5013854 | 17 | 2 | Dowty washer | Tredo 3/4" |
| 59018004 | 18 | 2 PCS | Spool control | |
| 5034353 | 19 | 1 | • Cap | |
| 521688 | 20 | 2 | Check valve | XKIT 010000 |
| 59018010 | 21 | 1 PCS | Heat flow regulator | |
| 59018007 | 22 | 2 PCS | Anti-cavitation valve | |
| 59018008 | 23 | 1 PCS | Backpressure valve | |
| 59040300 | 24 | 2 PCS | Actuator | |
| 59018009 | 25 | 2 | • Seal | |
| 5004913 | 26 | 2 | • Screw | MC6S M6x20 |
| 5004945 | 27 | 1 PCS | • Screw | MC6S 6x90 |
| 59018200 | 28 | 1 | Seal kit | for valve |


© 2025 Jost