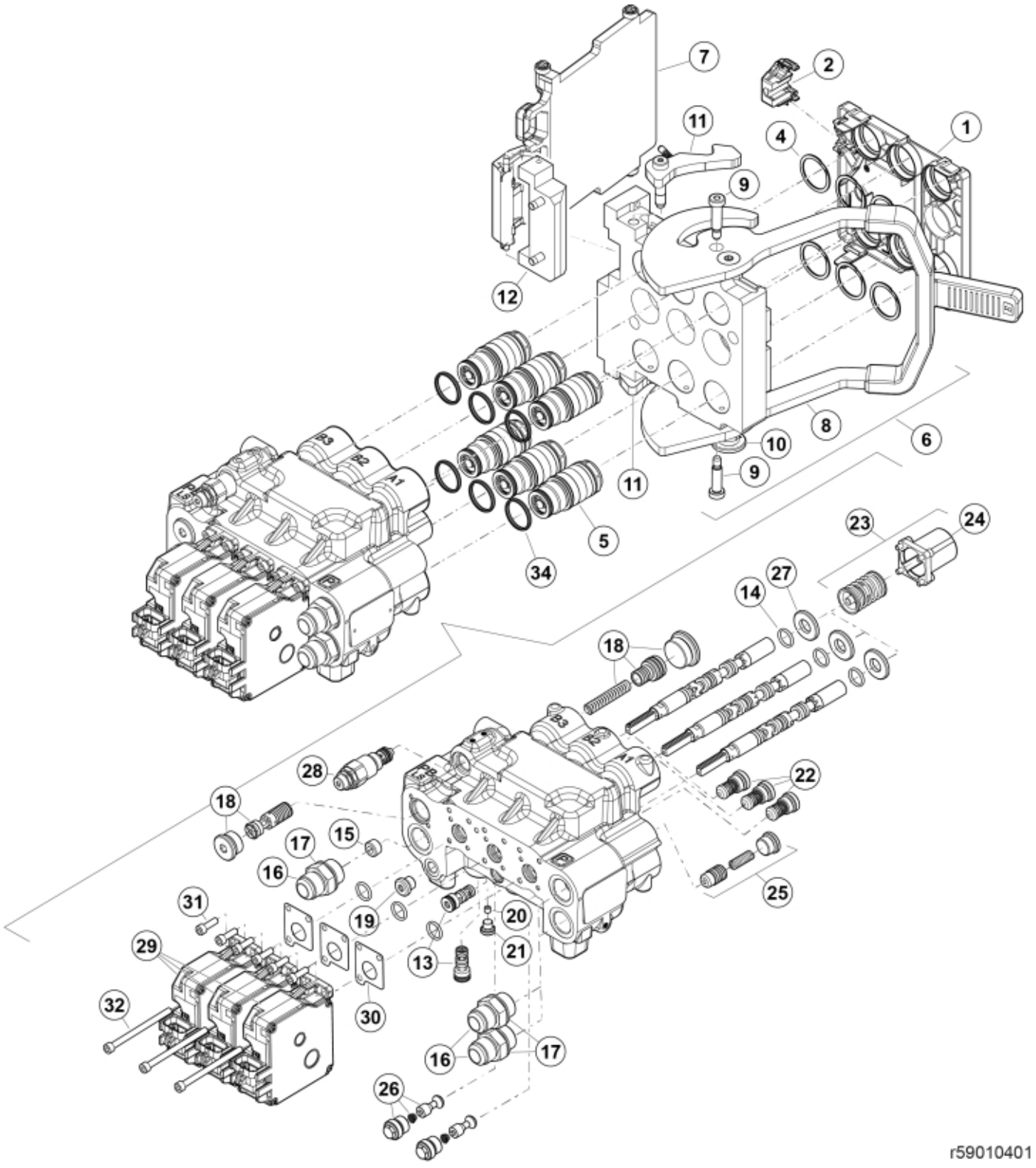
7
2
11
4
1
9
12
8
6
10
9
11
5
34
23
24
14
27
18
18
28
22
18
17
15
16
25
31
19
20
29
13
21
32
30
16
17
26
r59010401

© 2025 Jost

Part assemblies		QE Valve L3 QC6 OC		
Specification		Specification: Open Centre		
PartNo	**Pos**	**Qty**	**Name**	**Specifications**
59021027	1	1 PCS	Cover	
59021025	2	1	Connector Support	
59021051	4	6	Circlip	
59021041	5	6	Coupling	
59021007	6	1	Multi coupling base, QC6	
59021036	7	1 PCS	• Cover kit	
59021058	8	1 PCS	• Lever cpl, QC6	
59021059	9	1 PCS	• Screw kit	
59021063	10	1	• Safety lock	
59021060	11	1	• Locking mechanism	
59021065	12	1 PCS	• Hinge kit	
59018013	13	2 PCS	Shuttle valve	
5034349	14	6	O-ring	15,88 x 2,62
59018105	15	1 PCS	Plug	
5027463	16	3	Adaptor	3/4" BSP-1 1/16" JIC
5013854	17	3	Dowty washer	Tredo 3/4"
59018006	18	1 PCS	Shunt OC cpl.	
5045151	19	1 PCS	Plug	BSP 1/4"
59018014	20	1 PCS	Orifice	M6
5028242	21	1	Plug	G1/8"
521688	22	3	Check valve	XKIT 010000
59018004	23	1 PCS	Spool control	
5034353	24	2	• Cap	
59018012	25	1 PCS	Backpressure valve L3	
59018007	26	2 PCS	Anti-cavitation valve	
5034344	27	3	Washer	16 x 34 x 4
59018201	28	1 PCS	Relief valve cpl.	200 bar
59040300	29	3 PCS	Actuator	
59018009	30	3	• Seal	
5004913	31	2	• Screw	MC6S M6x20
5004945	32	1 PCS	• Screw	MC6S 6x90
59018300	33	1	Seal kit	for valve
59021044	34	1	Seal kit	for coupling/adaptor (supplied in bags of 10)

© 2025 Jost