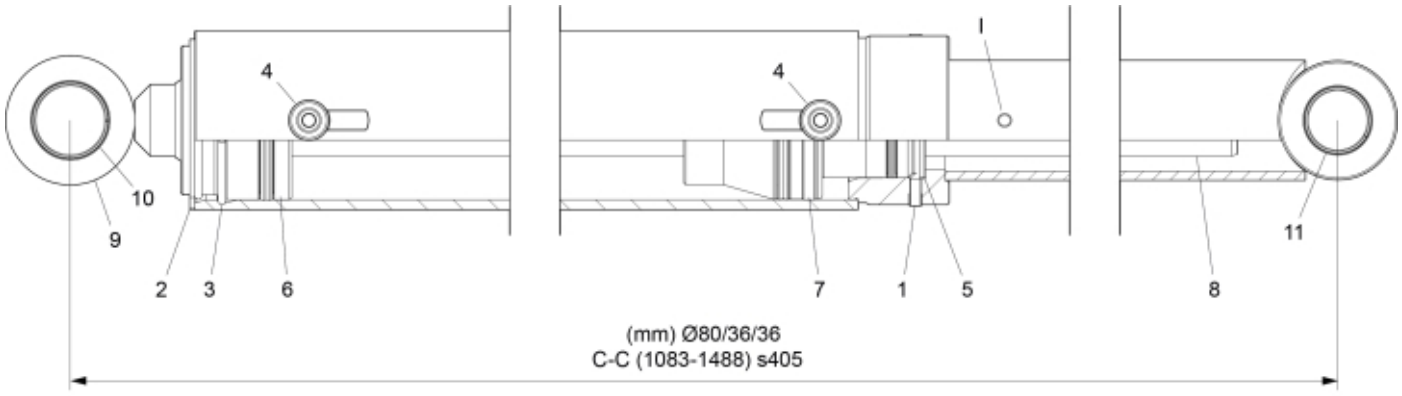
4
4
I
10
9
2
3
6
7
1
5
8
11
(mm) Ø80/36/36
C-C (1083-1488) s405

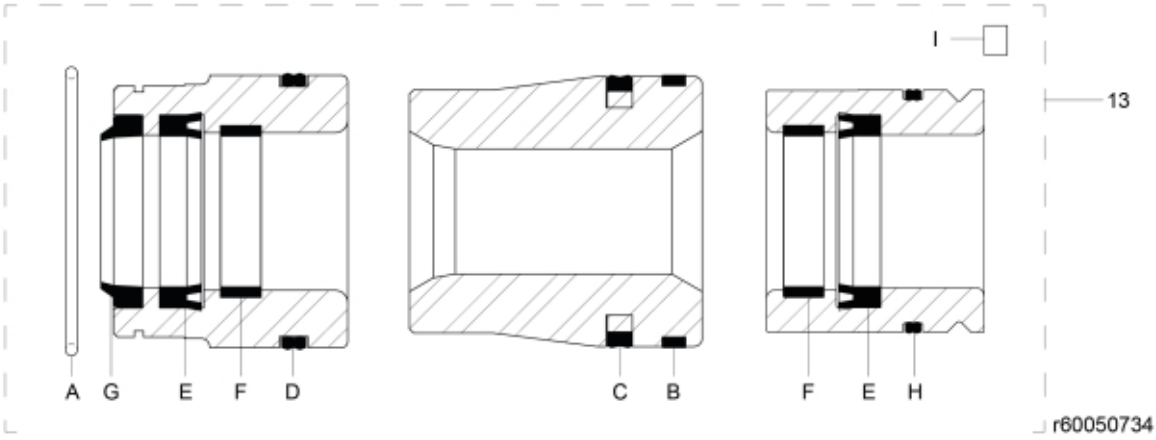
I
13
A
G
E
F
D
C
B
F
E
H
r60050734

© 2025 Jost

Description	80/36/36
Part assemblies	Tilt Cylinder
Specification	Specification: Glossy Black

PartNo	Pos	Qty	Name	Specifications
5005983	1	2	Stop screw	S6SS M6x16
5016620	2	1	Retaining ring	
5016667	3	1	Retaining ring	
5026637	4	2	Plug	
60055917	5	1 PCS	Guide	
60055932	6	1 PCS	Bearing	D80/36
60055939	7	1	Piston	D80
60055893	8	1 PCS	Rear rod	
60055880	9	1	Piston rod	
5018514	10	2	Bushing	D35 L=20
5018515	11	2	Bushing	D30 L=20
60050797	13	1	Seal kit	
5037241	A	1	• O-ring	72,62 x 3,53
5040015	B	1	• Guide ring	80/75 x 5,5
5040025	C	1	• Piston seal	80/64,5 x 6,3
5039005	D	1	• Cover seal	80 x 73,6 x 6,4
5051937	E	1 PCS	• Seal	36-46-10
5051938	F	2	• Guide ring	Ø41
5051939	G	1	• Wiper	46,1/35 x 10/7
5039001	H	1	• Seal kit	58 x 53.4 x 4.1
5022095	I	1	• Plug	

© 2025 Jost