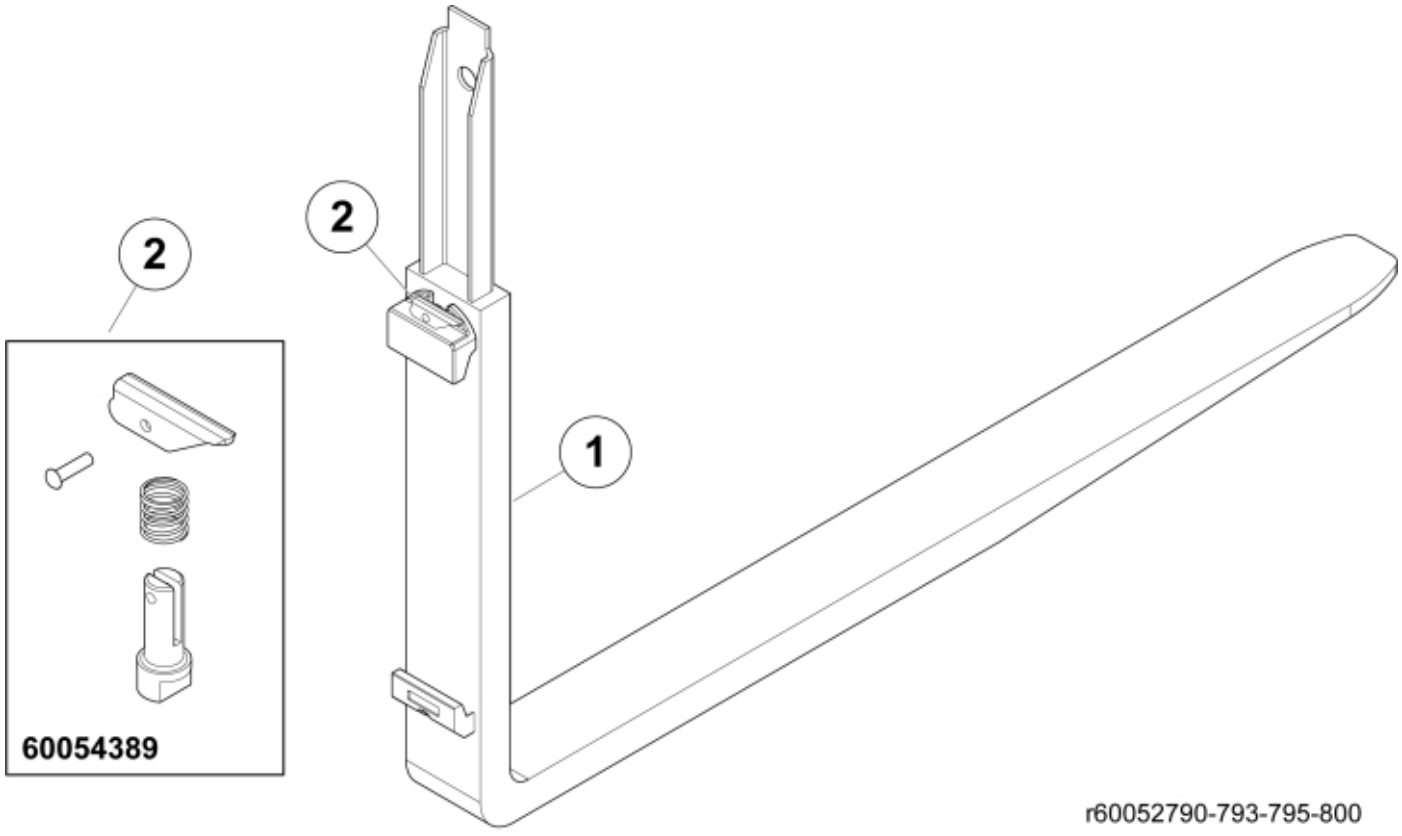

© 2025 Jost

Description	L=1220 800kg
Part assemblies	Fork
Specification	Specification: 1220 mm, 1600 kg

PartNo	Pos	Qty	Name	Specifications
60052798	1	1 PCS	Fork	1220 mm, 1600 kg
60054389	2	1	Locking mechanism	

© 2025 Jost