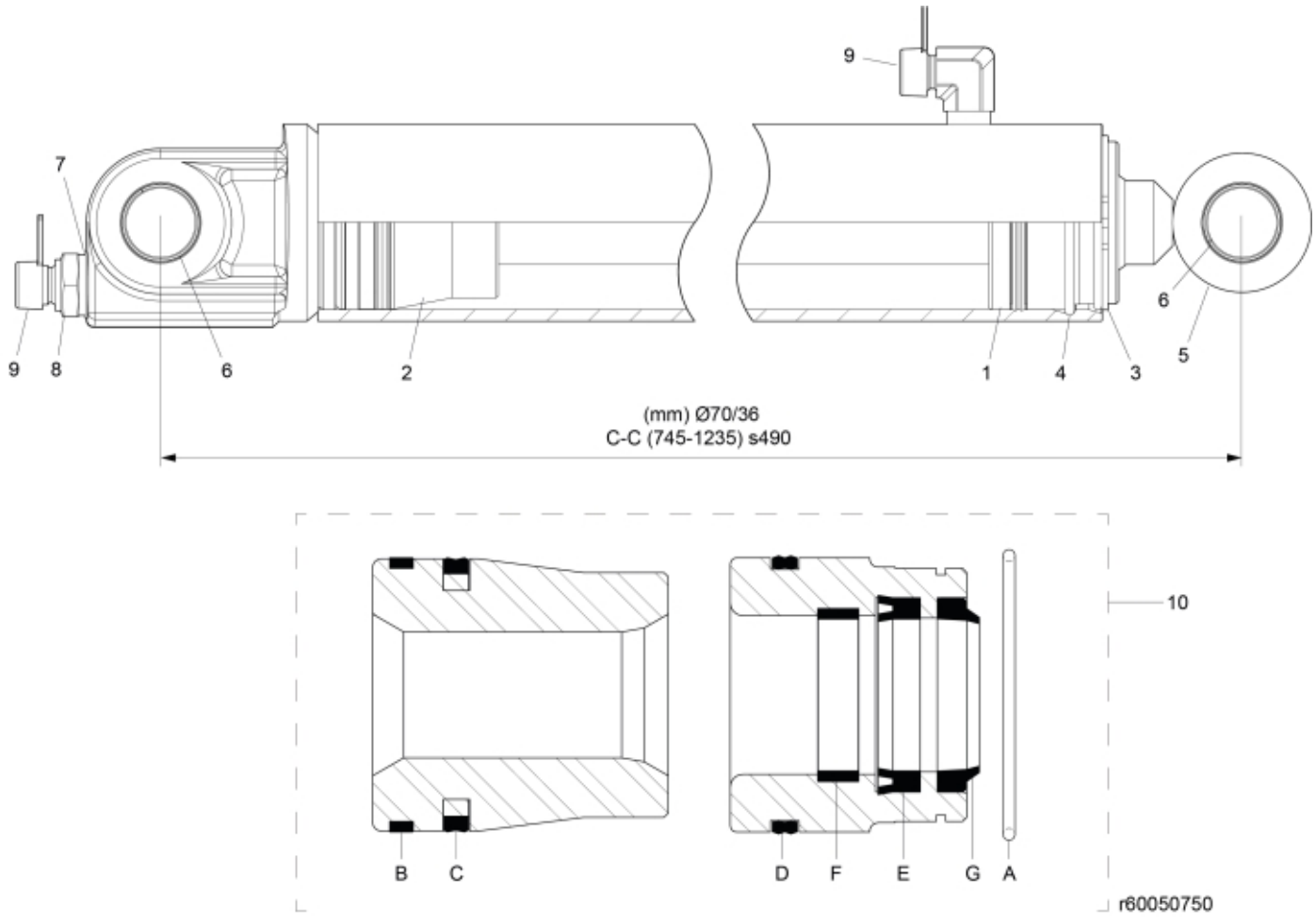

© 2025 Jost

Description	70/36
Part assemblies	Lift Cylinder
Specification	Specification: Glossy Black

PartNo	Pos	Qty	Name	Specifications
60055813	1	1 PCS	Bearing	70/36
60055835	2	1	Piston	
5016621	3	1	Retaining ring	
5016669	4	1	Retaining ring	
60055530	5	1	Piston rod	
5018515	6	4	Bushing	D30 L=20
5013853	7	1	Dowty washer	Tredo 1/2", Part is included in kit 60007907 Hose cpl., 9032177 Hose cpl.
1120011	8	1	Adaptor	R1/2"-R3/8"
5026637	9	2	Plug	
60051346	10	1	Seal kit	
5037243	A	1	• O-ring	63,09x3,53
	B	1	• Guide ring	70/65x5,5
5040023	C	1	• Piston seal	70/54,5x6,3
5039003	D	1	• Cover seal	70 x 64,6 x 6,2
5051937	E	1 PCS	• Seal	36-46-10
5051938	F	1	• Guide ring	Ø41
5051939	G	1	• Wiper	46,1/35 x 10/7

© 2025 Jost