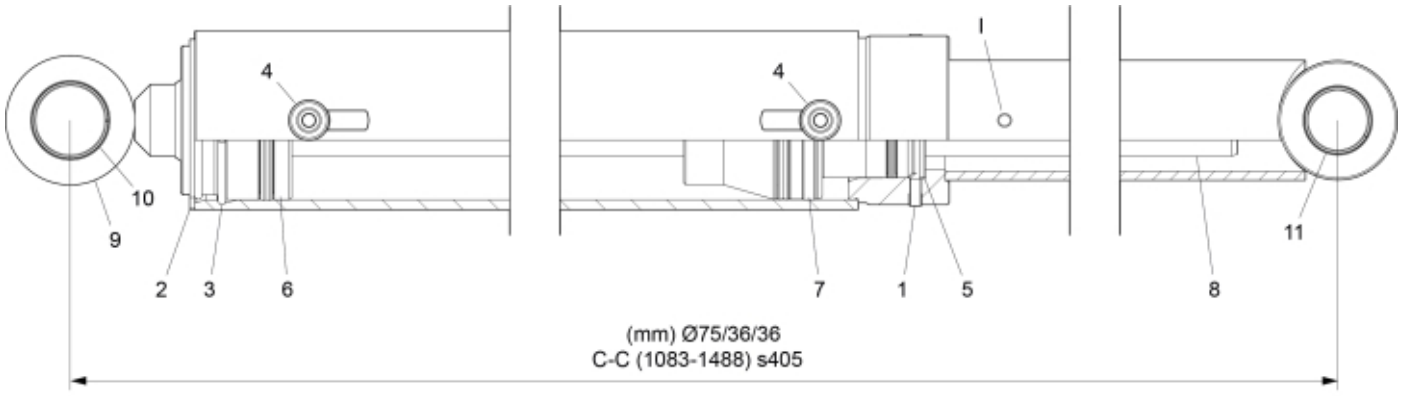
4
4
I
10
9
2
3
6
7
1
5
8
11
(mm) Ø75/36/36
C-C (1083-1488) s405

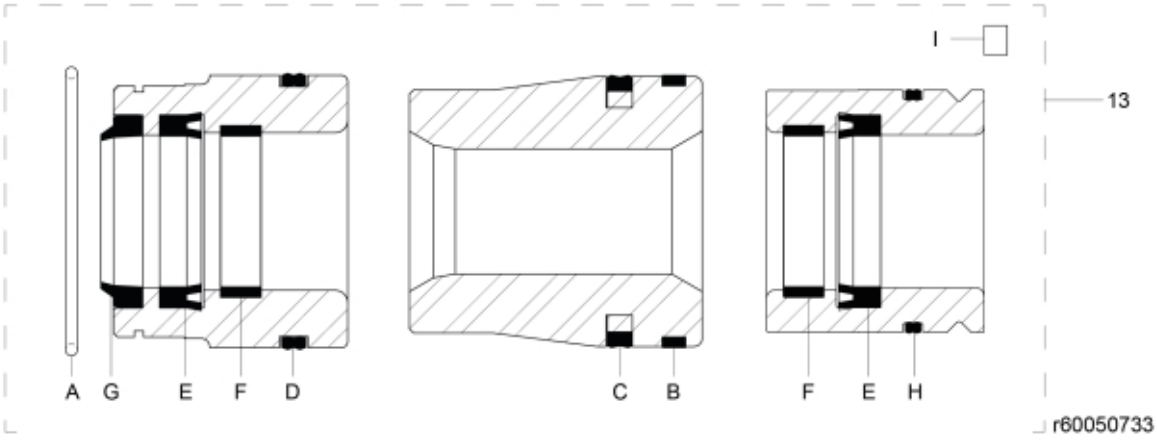
I
13
A
G
E
F
D
C
B
F
E
H
r60050733

© 2025 Jost

Description	75/36/36
Part assemblies	Tilt Cylinder
Specification	Specification: Glossy Black

PartNo	Pos	Qty	Name	Specifications
5006021	1	2 PCS	Stop screw	SSS M6x12
5016618	2	1	Retaining ring	
5016665	3	1	Retaining ring	
5026637	4	2	Plug	
60055917	5	1 PCS	Guide	
60055860	6	1 PCS	Bearing	75/36
60055862	7	1	Piston	
60055893	8	1 PCS	Rear rod	
60055880	9	1	Piston rod	
5018514	10	2	Bushing	D35 L=20
5018515	11	2	Bushing	D30 L=20
60050796	13	1	Seal kit	
5037239	A	1	• O-ring	68.26x3x53
5040014	B	2	• Guide ring	75/70x5.5
5040024	C	1	• Piston seal	75/59.5x6.3
5039004	D	1	• Cover seal	75 x 69.6 x 6.2
5051937	E	2 PCS	• Seal	36-46-10
5051938	F	1	• Guide ring	Ø41
5051939	G	1	• Wiper	46,1/35 x 10/7
5039001	H	1	• Seal kit	58 x 53.4 x 4.1
5022095	I	1	• Plug	

© 2025 Jost