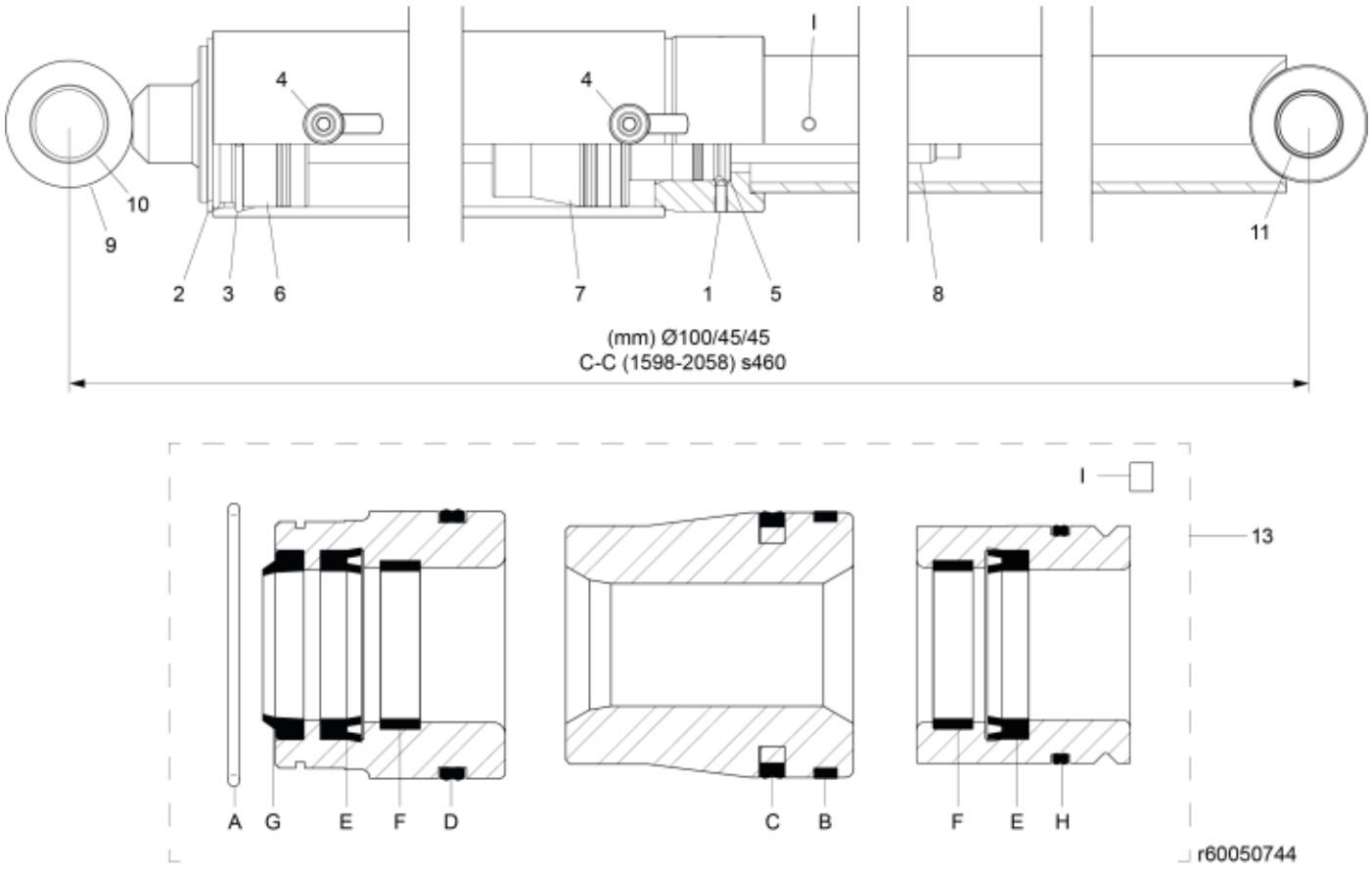
I
4
4
10
9
2
3
6
7
1
5
8
11
(mm) Ø100/45/45
C-C (1598-2058) s460

I
13
A
G
E
F
D
C
B
F
E
H
r60050744

© 2025 Jost

Description	100/45/45
Part assemblies	Tilt Cylinder
Specification	Specification: Glossy Black

PartNo	Pos	Qty	Name	Specifications
5005983	1	2	Stop screw	S6SS M6x16
5016624	2	1	Retaining ring	
5016677	3	1	Retaining ring	
5026637	4	2	Plug	
60055989	5	1 PCS	Guide	
60055979	6	1 PCS	Bearing	
12710012	7	1	Piston	
60055996	8	1 PCS	Rear rod	
60055982	9	1	Piston rod	
5018513	10	2	Bushing	D40 L=20
5018514	11	2	Bushing	D35 L=20
60050806	13	1	Seal kit	
5037265	A	1	• O-ring	91,6 x 3,53
5040018	B	1	• Guide ring	100/95 x 5,5
5040028	C	1	• Piston seal	100/84,5 x 6,3
5039008	D	1	• Seal kit	100 x 93,8 x 6,9
5051942	E	2	• Seal	45-55-10
5051941	F	2	• Guide ring	Ø50
5051940	G	1	• Wiper	55,1/44 x 10/7
5039003	H	1	• Cover seal	70 x 64,6 x 6,2
5022095	I	1	• Plug	

© 2025 Jost