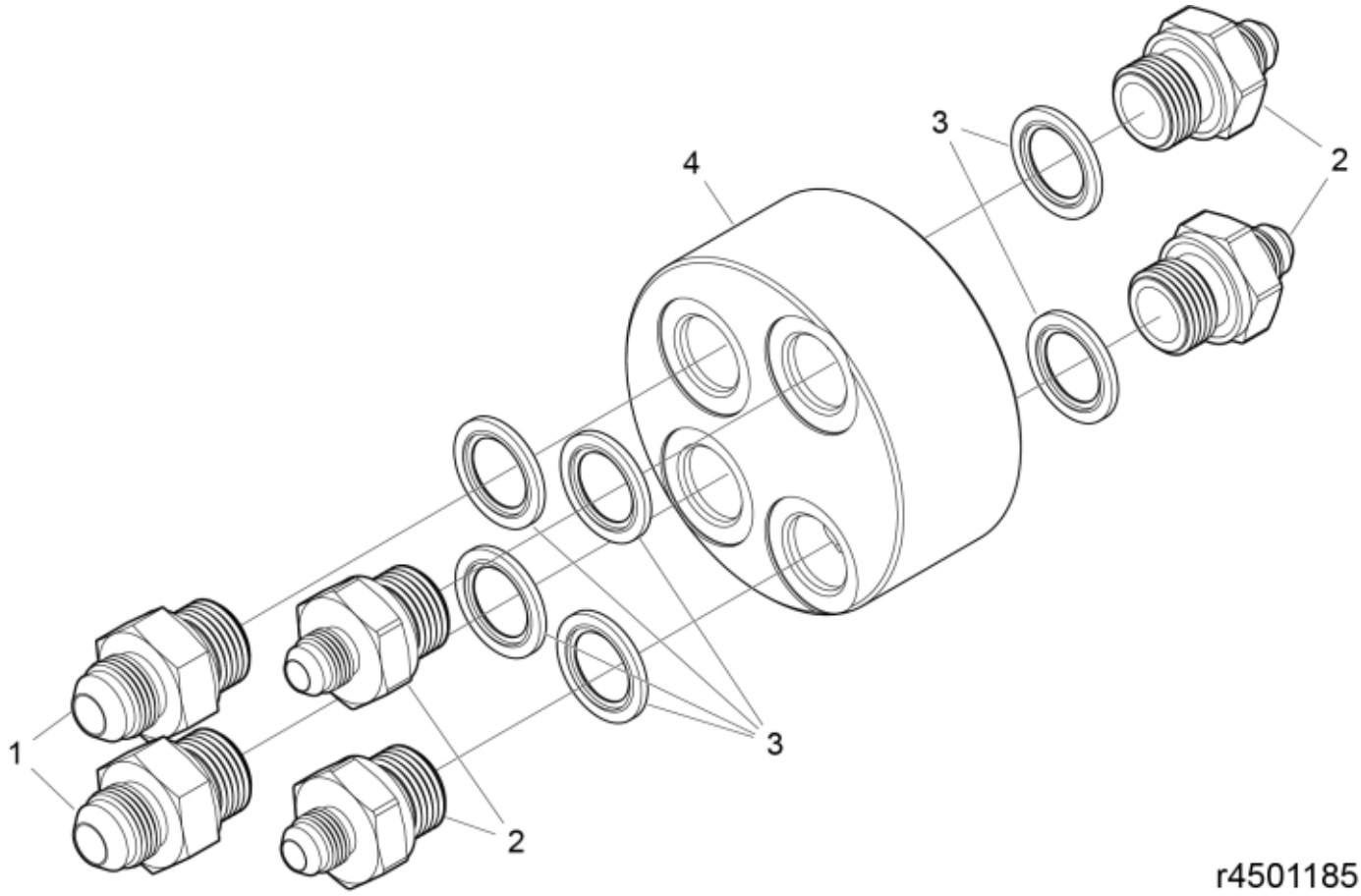



© 2025 Jost

| | |
|---|---|
| **Part assemblies** | Block cpl |
| **Specification** | Specification: Tilt |

| PartNo | Pos | Qty | Name | Specifications |
|---|---|---|---|---|
| 5027417 | 1 | 2 | Adaptor | 3/4" JIC 37-G1/2" |
| 5051985 | 2 | 4 PCS | Adaptor | JIC 9/16-G1/2" |
| 5013853 | 3 | 6 | Dowty washer | Tredo 1/2", Part is included in kit 60007907 Hose cpl., 9032177 Hose cpl. |
| 60104282 | 4 | 1 | Block | |


© 2025 Jost