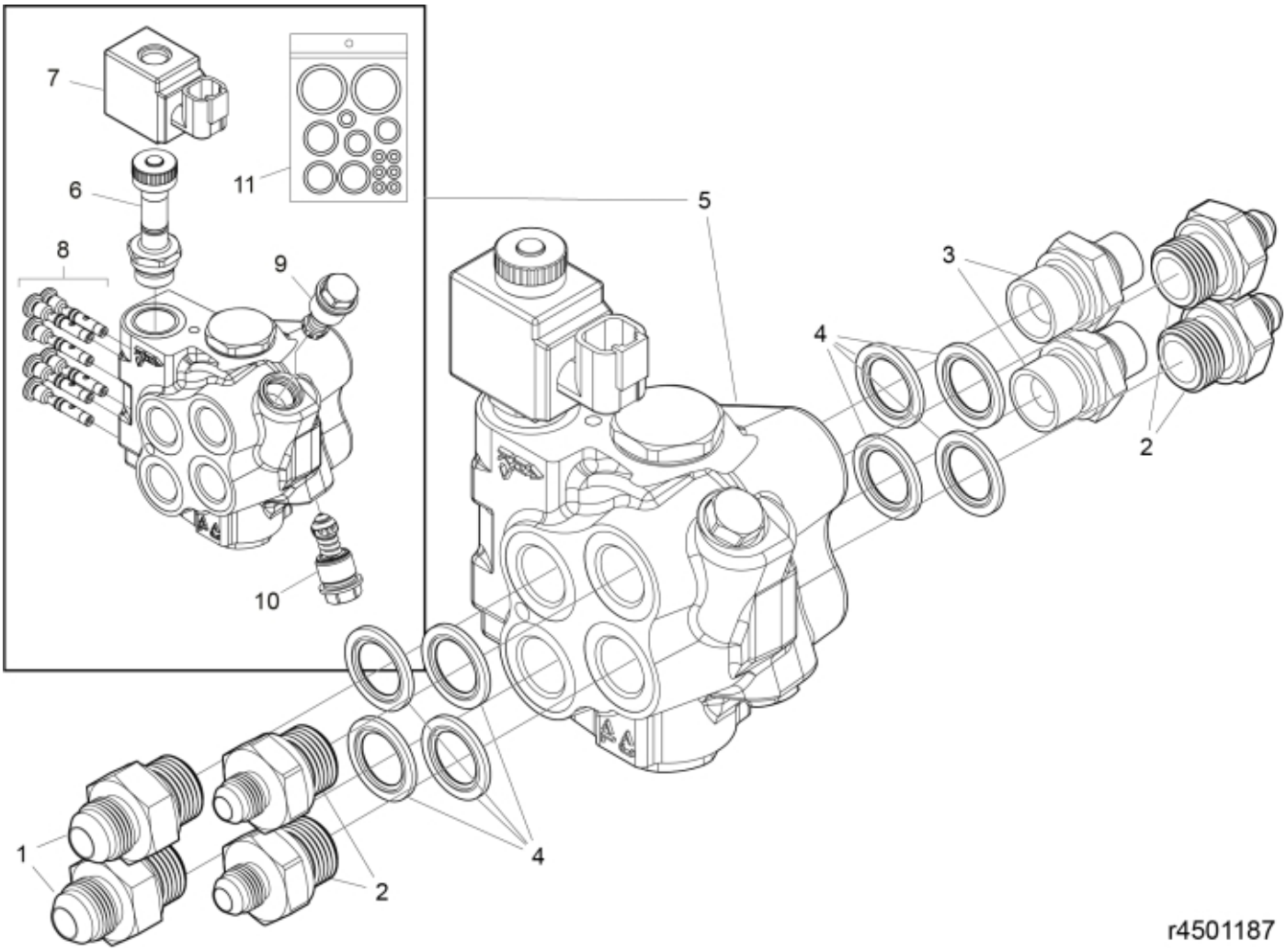

© 2025 Jost

Part assemblies Specification		Block cpl Specification: 3rd service		
PartNo	**Pos**	**Qty**	**Name**	**Specifications**
5027417	1	2	Adaptor	3/4" JIC 37-G1/2"
5051985	2	4 PCS	Adaptor	JIC 9/16-G1/2"
1120011	3	2	Adaptor	R1/2"-R3/8"
5013853	4	6	Dowty washer	Tredo 1/2", Part is included in kit 60007907 Hose cpl., 9032177 Hose cpl.
60063746	5	1	Valve assy.	3rd service
4501096	6	1	• Cartridge valve	
4501097	7	1	• Coil	
4501101	8	1	• Check valve	
4501098	9	1	• Relief valve cpl.	220 bar
60063492	10	1	• Relief valve cpl.	250 bar
4501104	11	1	• Seal kit	

© 2025 Jost