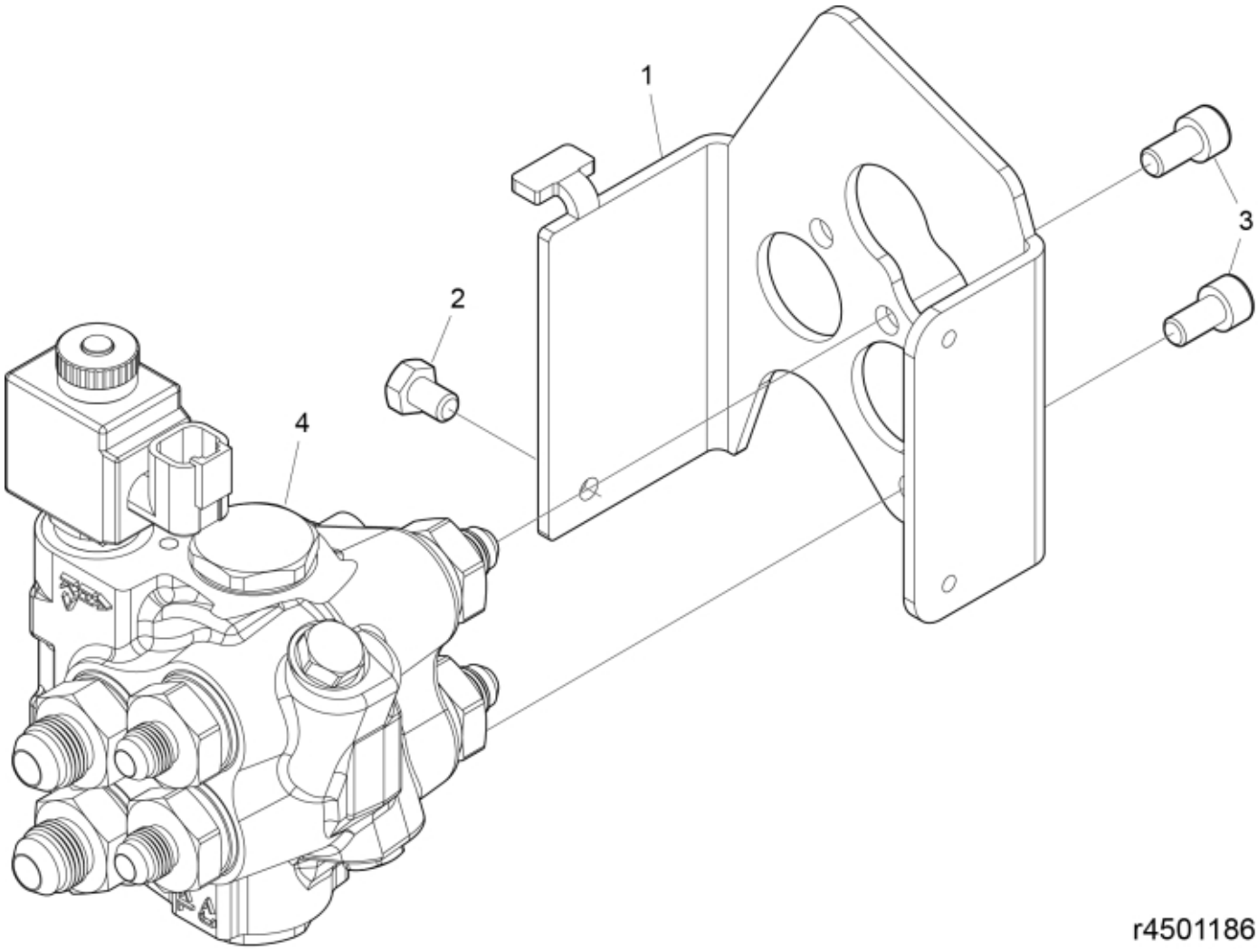



© 2025 Jost

| | |
|---|---|
| **Part assemblies** | CVU 3rd service |
| **Specification** | Year From: 12/14/2020 12:00:00 AM |

| PartNo | Pos | Qty | Name | Specifications |
|---|---|---|---|---|
| 4501186 | | 1 | CVU 3rd service | 12/14/2020 12:00:00 AM |
| 60057024 | 1 | 1 | Bracket | |
| 5002060 | 2 | 1 | Screw | M6S M8x12 (8,8) |
| 5050342 | 3 | 2 | Screw | MC6S M8x14 (8.8) |
| 4501187 | 4 | 1 | Block cpl | 3rd service |


© 2025 Jost