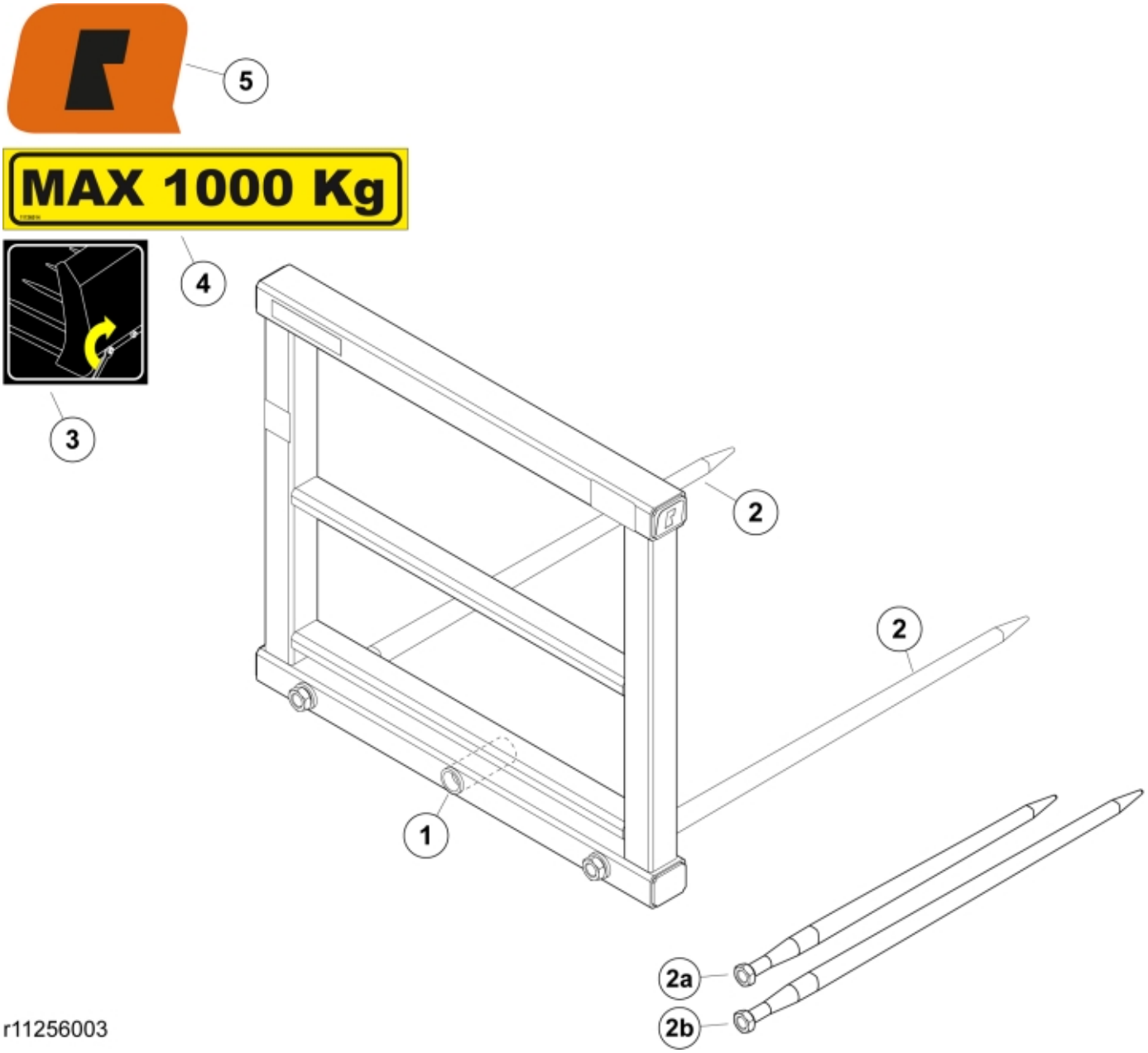

r11256003

© 2025 Jost

Part assemblies	Bale fork S+ 115
Specification	Year From: 4/1/2021 12:00:00 AM

PartNo	Pos	Qty	Name	Specifications
11256003		1	Bale fork S+ 115	4/1/2021 12:00:00 AM
1209699	1	3	Sleeve	
5068114-17	2a	3	Tine with nut	0-3 pcs, L=827mm (replaces 5068003)
5068120-17	2b	3	Tine with nut	0-3 pcs, L=1240mm (5068004)
11136517	3	1	Warning decal	"Tightening of tine"
11136514	4	1	Warning decal	"Max 1000 kg"
60049053	5	2	Decal	"Q" small 80x57

© 2025 Jost