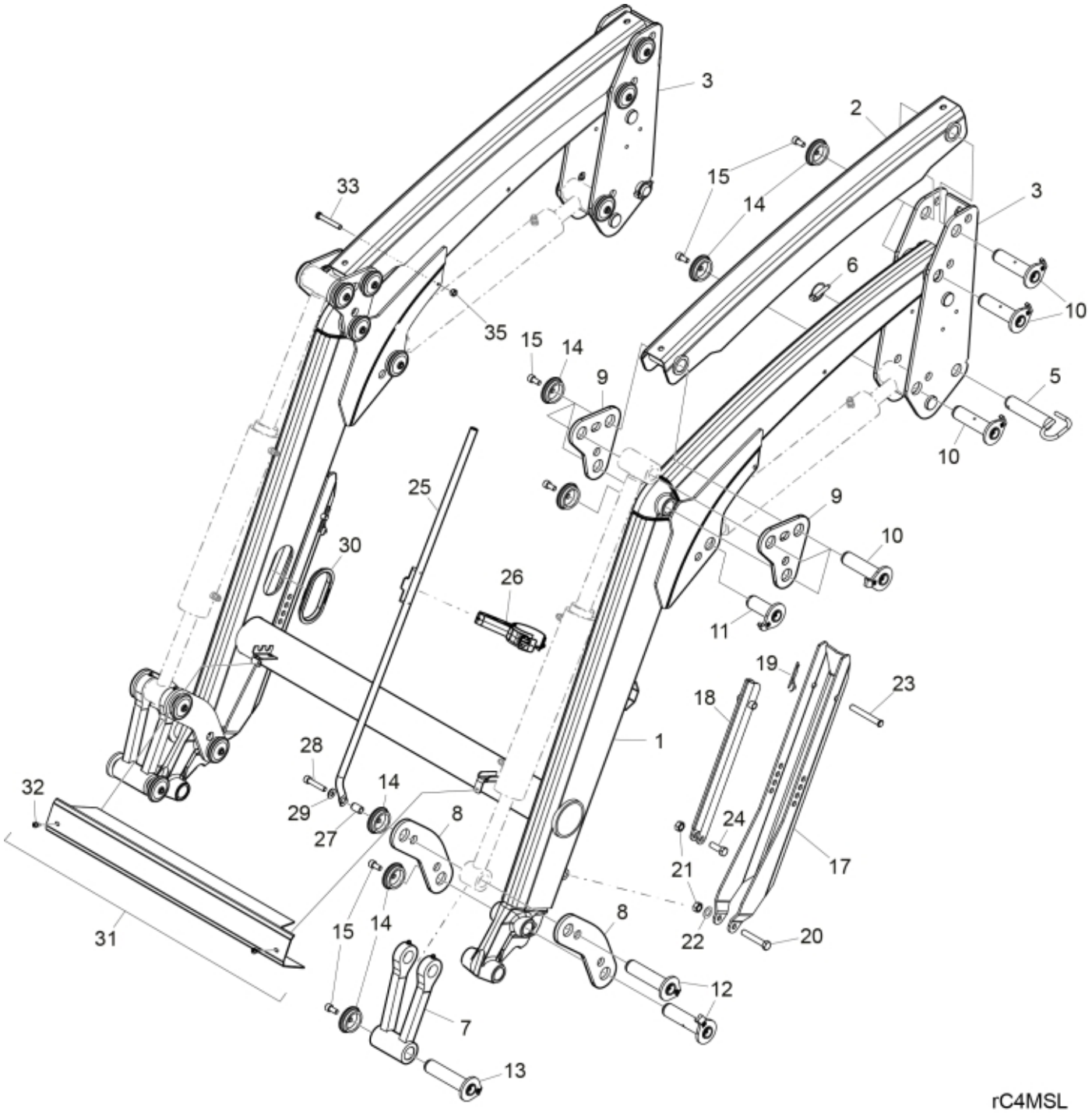
3
2
15
14
3
33
6
10
35
15
14
9
5
10
25
9
10
30
26
11
19
23
18
1
28
14
32
29
8
24
27
17
21
8
15
14
22
20
31
12
7
13
rC4MSL

© 2025 Jost

Part assemblies Loader beam

PartNo	Pos	Qty	Name	Specifications
60077639-17	1	1	Loader beam	Black Texture
60028513-17	2	2	Parallel rod	Black Texture
60028636-17	3	2	Bearing box	Black Texture
5221316	5	2	Locking Pin	
5017002	6	2	Linch pin	
60044661-1	7	2	Link	Glossy Black
5221400-17	8	4	Link	Black Texture
60028589-17	9	4	Knee link	Black Texture
9020105	10	12	Pivot Pin	D=30, L=113mm
60029313	11	2	Pivot Pin	D=30, L=75
9020100	12	4	Pivot Pin	D=30, L=122mm
60018046	13	2	Pivot Pin	D=30, L=127mm
5215131	14	20	Locking cover	
5050608	15	19	Screw	MC6S M10x20 Loc
60026832-17	17	2	Support leg	Black Texture
60027173-17	18	2	Stay	Black Texture
5221186	19	2	Pin clip	□ 12x120
5002988	20	2	Screw	M6S 12 x 70
5011911	21	4	Nut	M12
5013104	22	2	Washer	13.5 x 24 x 2
5221150	23	2	Locking Pin	
5002103	24	2	Screw	M12 x 35
5221787	25	1	Indicator rod	
5215208	26	1	Holder kit	
5215227	27	1	Spacer	
5050605	28	1	Screw	MC6S 10x50 Loc
5013110	29	1	Washer	BRB 10.5x22x2
60130480	30	2	Edge cover	
60046482	31	1	Cover kit	
5050430	32	2	• Screw	MRT-GF M6x12 T30
5004054	33	1	Screw	MC6S M8x80
5011553	35	1	Nut	M6M M8 Loc-king

© 2025 Jost