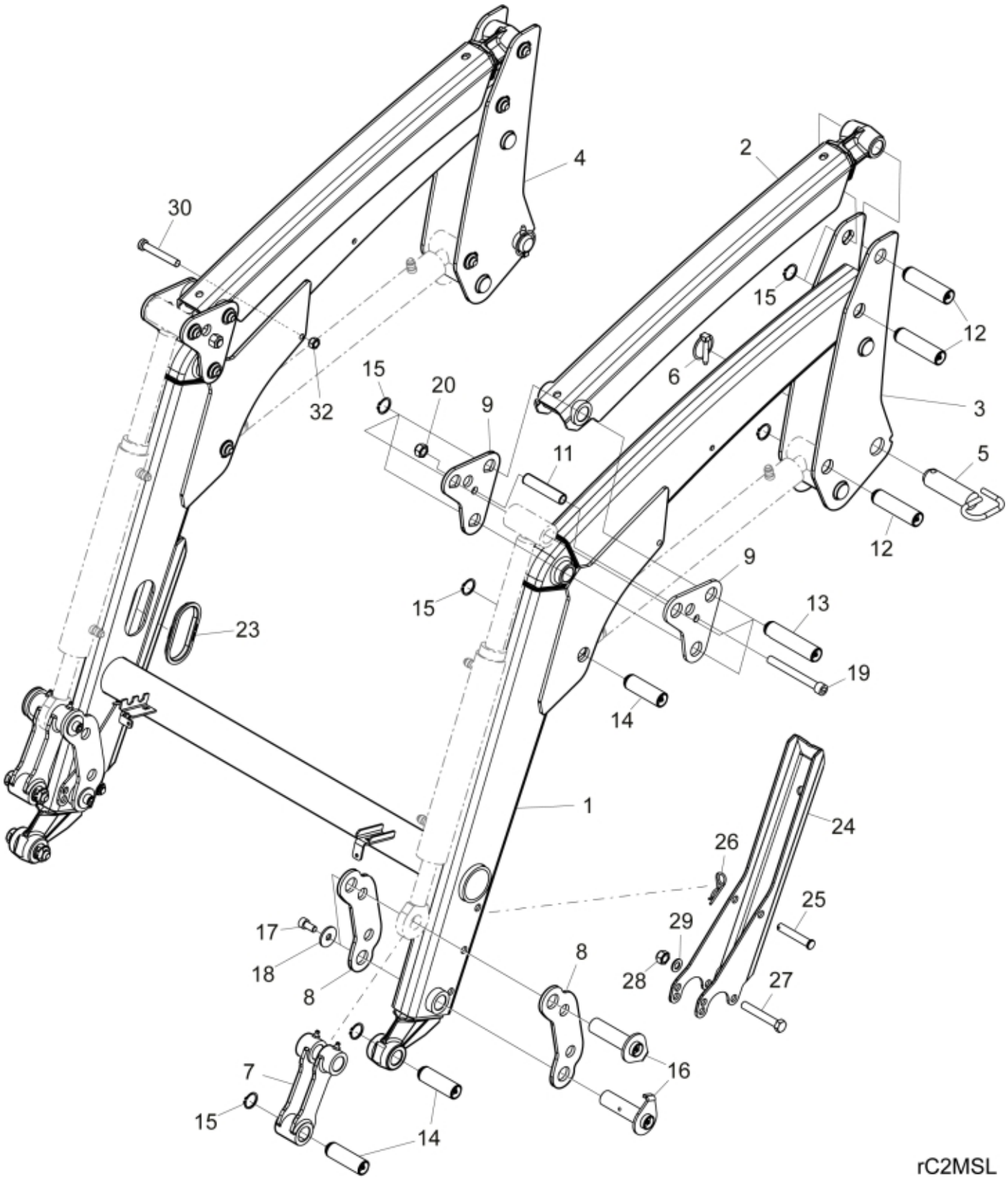
30
4
2
15
12
6
3
15
20
9
32
11
5
12
9
15
13
23
19
14
1
24
26
25
17
29
18
8
8
28
27
16
7
15
14
rC2MSL

© 2025 Jost

Part assemblies Loader beam

PartNo	Pos	Qty	Name	Specifications
60037921-17	1	1	Loader beam	Black Texture
60028481-17	2	2	Parallel rod	Black Texture
60022125-17	3	1 PCS	Bearing box LH	Black Texture
60022124-17	4	1 PCS	Bearing box RH	Black Texture
60022562	5	2	Locking Pin	
5017002	6	2	Linch pin	
60029893	7	2	Link	
60029676-17	8	4	Link	Black Texture
4501323-17	9	1	Knee link kit	Black Texture
60031539	11	2	Spacer	
60018355	12	6	Pin	
60027416	13	6	Pin	
60021788	14	6	Pin	
5050817	15	18	Circlip	
60029927	16	4	Pin	D=25 L=88,5
5050608	17	4	Screw	MC6S M10x20 Loc
5051181	18	4	Washer	
5050829	19	2	Screw	MC6S M12x100
10412853	20	2	Nut	M6M M12 Loc Nut
60030593	23	2	Edge cover	
60029198-17	24	2 PCS	Support leg	Black Texture
5050830	25	2	Locking Pin	HCB 12x73 FZB
5221186	26	2	Pin clip	□ 12x120
5002121	27	2	Screw	M6S M12x80 (8,8)
5011911	28	2	Nut	M12
5013103	29	2	Washer	BRB 13x24
5004057	30	1	Screw	MC6S M8 x75 (8.8)
5011553	32	1	Nut	M6M M8 Loc-king

© 2025 Jost