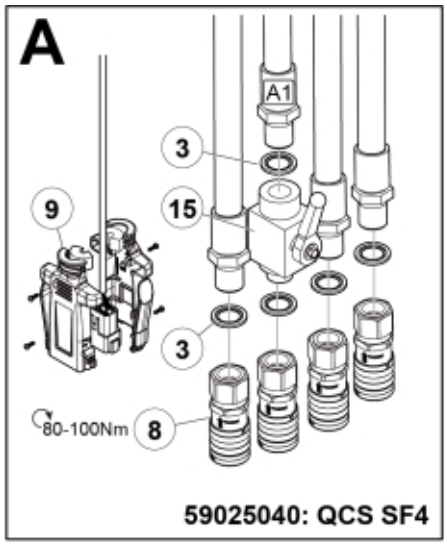

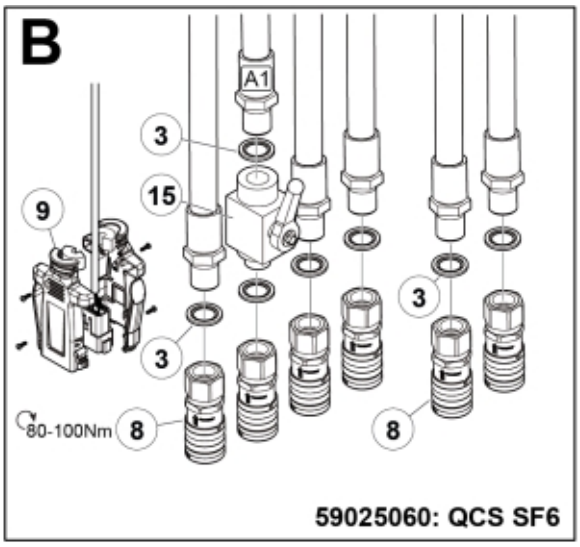

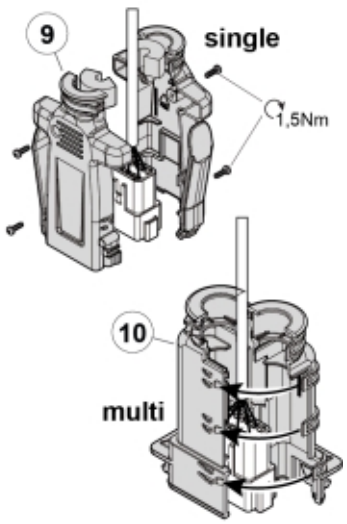

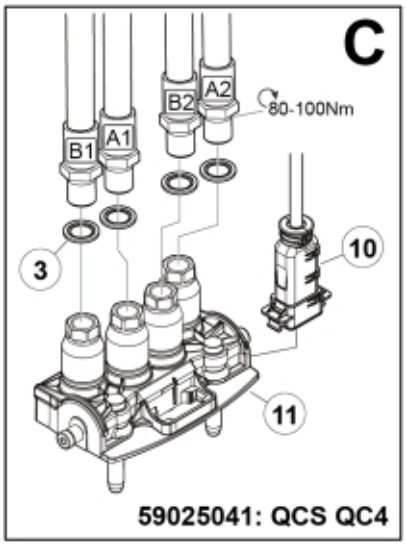

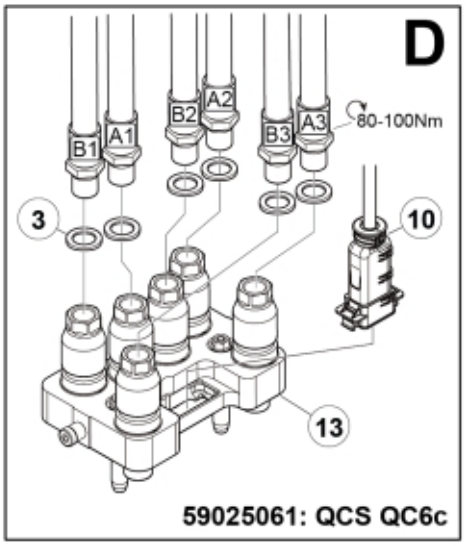

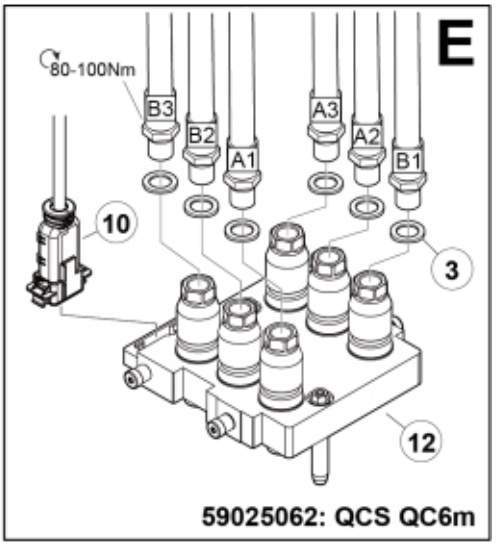

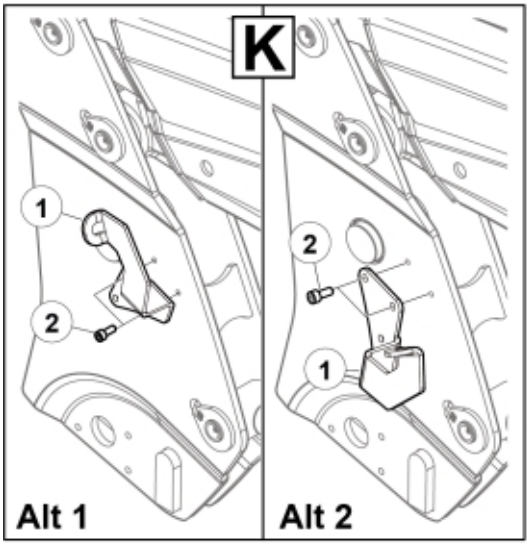

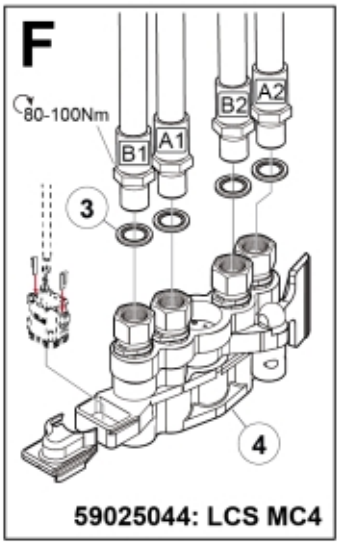

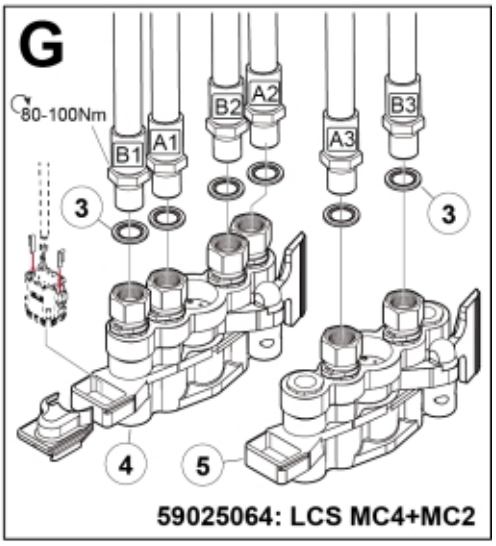

M 59025040-41-43-44-60-61-62-63-64-65_1

© 2025 Jost

M 59025040-41-43-44-60-61-62-63-64-65_2

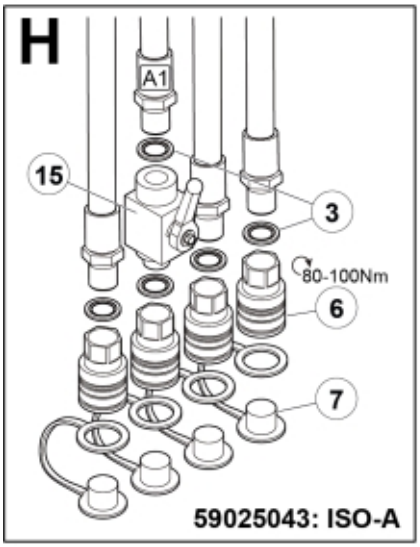

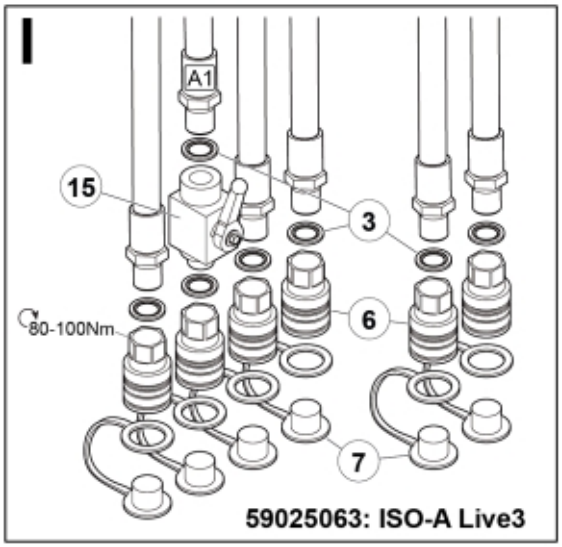

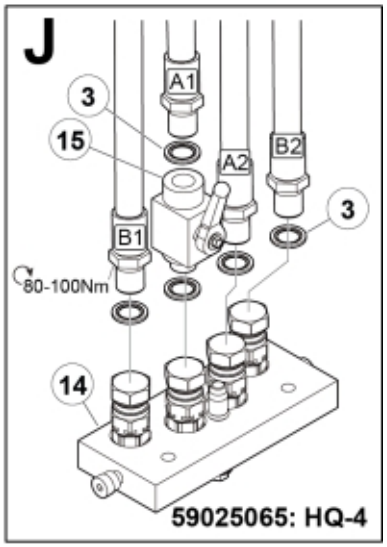

	QCS	LCS	Old/OEM	Color
Lower	B1	B1	1	Green
Lift	A1	A1	2	Blue
Crowd	B2	B2	4	Red
Dump	A2	A2	3	Yellow
3rd+ 3RD+	B3	A1 L3	-	Red
3rd- 3RD-	A3	B2 L3	-	Blue

© 2025 Jost

Description	ISO-A to QCS SF6
Part assemblies	Interface kit

PartNo	Pos	Qty	Name	Specifications
59025060		1	Interface kit	
60049421	1	1	Holder kit	
5004061	2	2	• Screw	MC6S M8x20
5013853	3	7	Dowty washer	Tredo 1/2", Part is included in kit 60007907 Hose cpl., 9032177 Hose cpl.
5044976	8	6	Coupling	3/8" (5044946)
59021021	9	1	Connector handle	
5033898	15	1	Shut-off valve	1/2"

© 2025 Jost