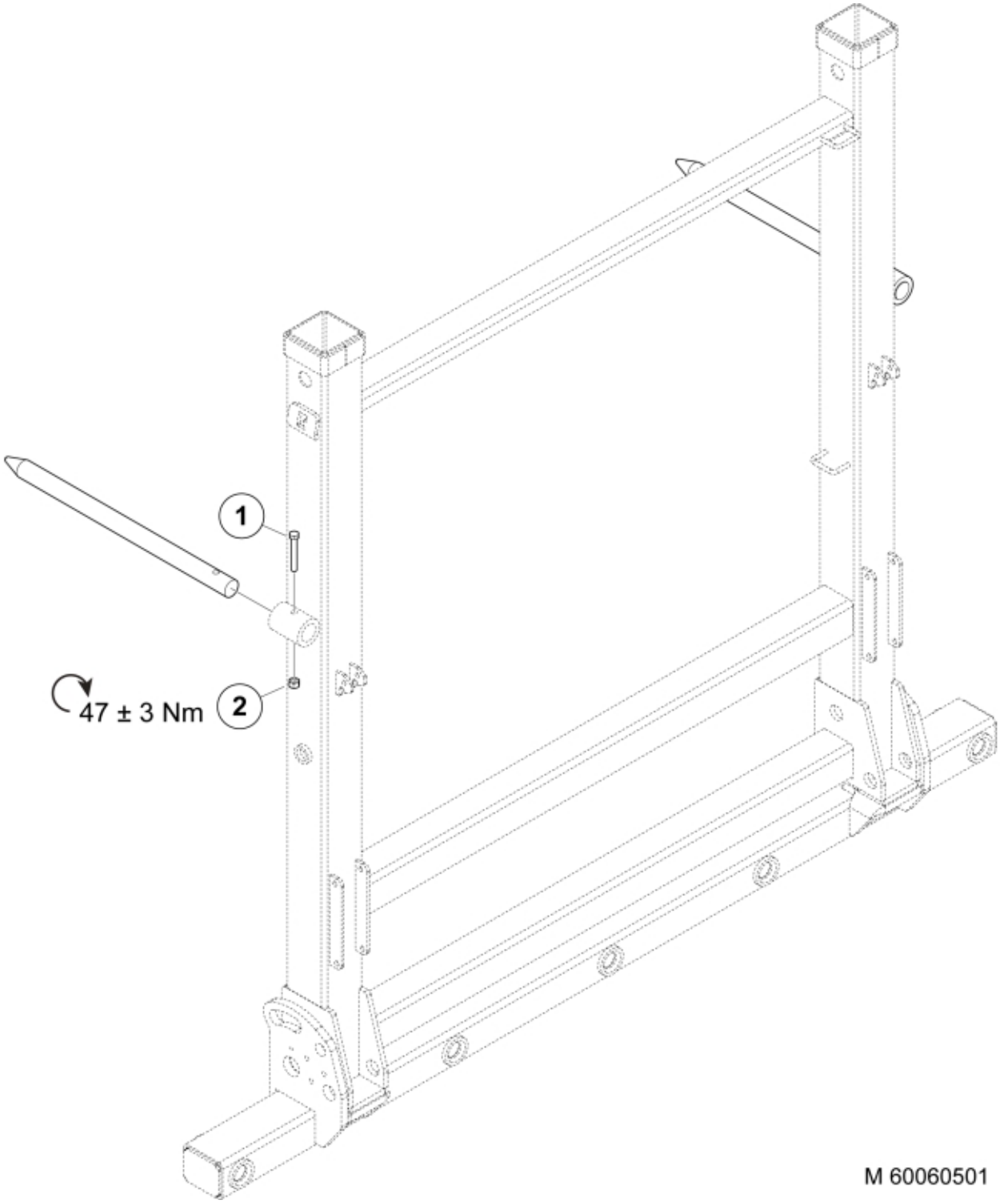

© 2025 Jost

Part assemblies	Side tine kit

PartNo	Pos	Qty	Name	Specifications
60060501		1 PCS	Side tine kit	
5002083	1	2 PCS	Screw	M6S M10X75
5011554	2	2	Nut	Loc-King M10

© 2025 Jost