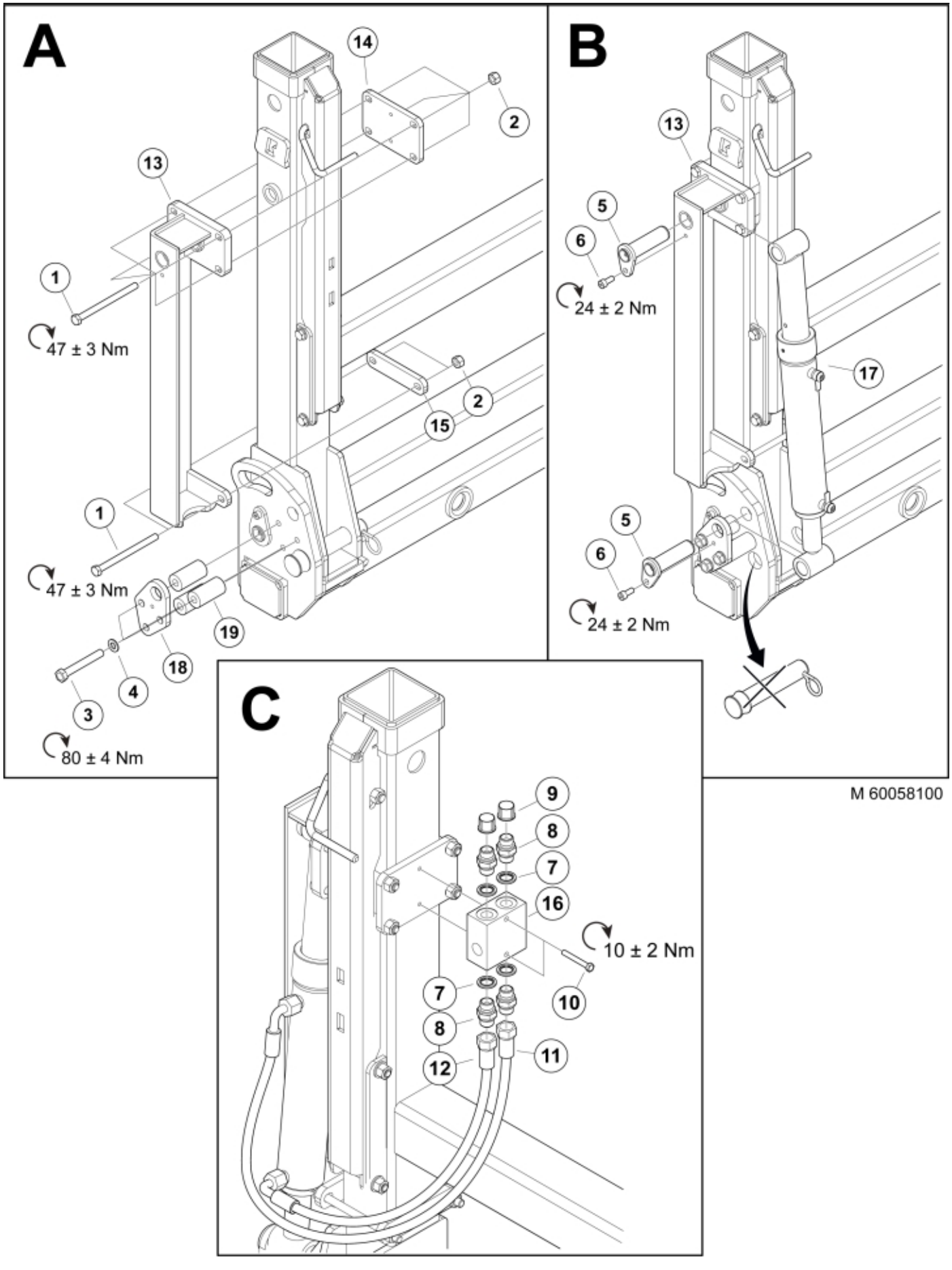

M 60058100

© 2025 Jost

Part assemblies Folding forks

PartNo	Pos	Qty	Name	Specifications
60058100		1 PCS	Folding forks	
5002085	1	6	Screw	M6S 10x140
5011554	2	6	Nut	Loc-King M10
5002936	3	3	Screw	M6S 8.8 fzb M12 x 1,75 x 90
5013103	4	3	Washer	BRB 13x24
60058132	5	2 PCS	Pin	
5051820	6	2 PCS	Screw	MLC6S M8X20 (8.8)
5013852	7	4	Dowty washer	Tredo 3/8"
1120010	8	4	Adaptor	
5022118	9	2 PCS	Dust Cover	
5002031	10	2 PCS	Screw	M6S_M6 x 45 (8.8)
60060078	11	1 PCS	Hose	3/8" L=880 3/8G90LM 3/8GRLM
60060077	12	1 PCS	Hose	3/8" L=660 3/8G90LM 3/8GRLM
60059680-17	13	1 PCS	Bracket	
60058102	14	1 PCS	Bracket	
60059694	15	1 PCS	Bracket	
60009358	16	1 PCS	Pressure relief valve	
60059637-1	17	1 PCS	Cylinder	
60058083	18	1 PCS	Bracket	
60058085	19	3 PCS	Spacer tube	

© 2025 Jost