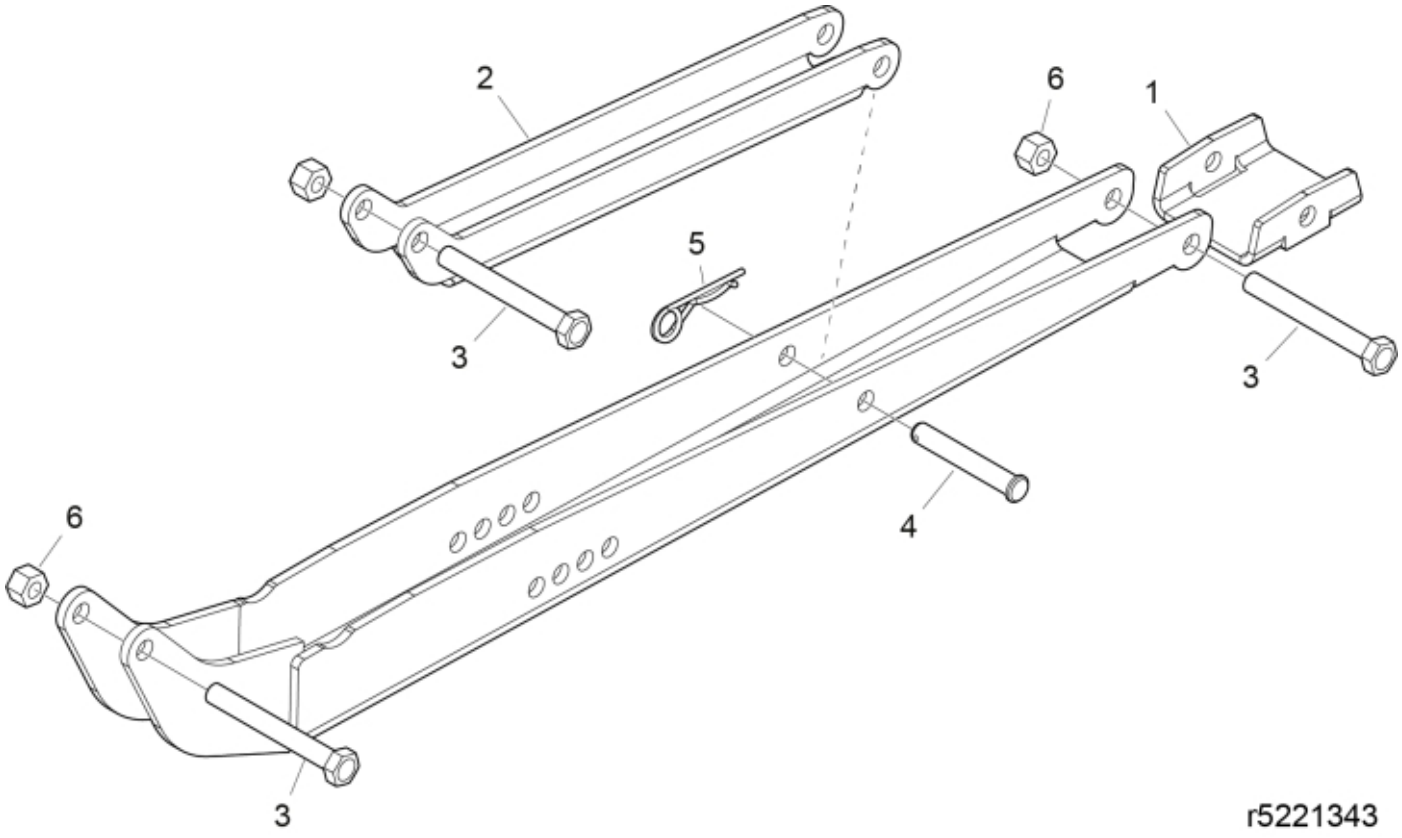

© 2025 Jost

Part assemblies	Support leg
Specification	Specification: Kubota Orange
	Year To: 1/19/2021 12:00:00 AM

PartNo	Pos	Qty	Name	Specifications
5221495-3	1	1 PCS	Support	Kubota Orange
5221496-3	2	1 PCS	Stay	Kubota Orange
5002114	3	3	Screw	M6S 12x100
5021955	4	1	Locking Pin	
5221186	5	1	Pin clip	□ 12x120
5011555	6	3	Nut	M12 Loc

© 2025 Jost