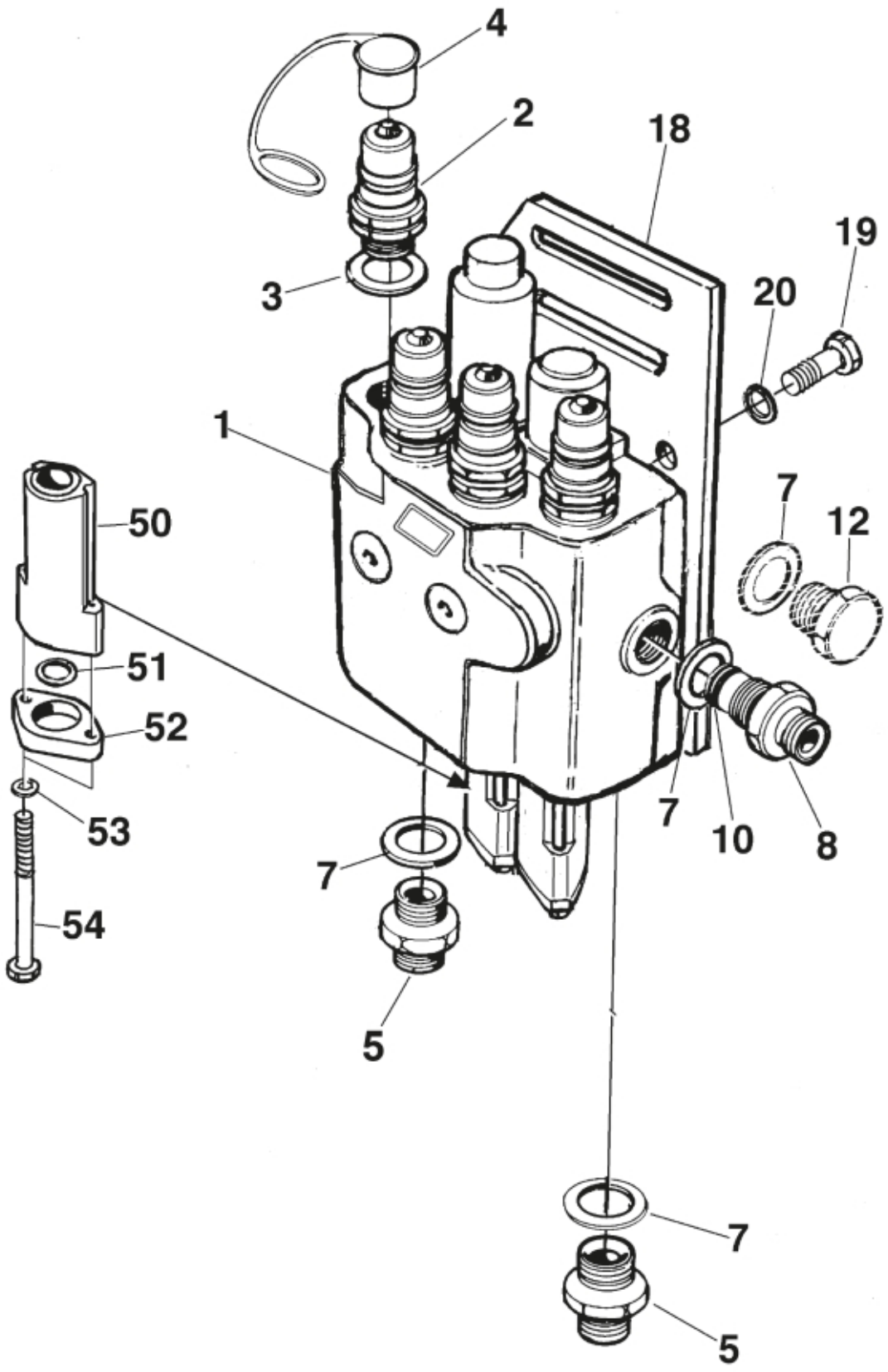

© 2025 Jost

Description	Walvoil SDM 143/2
Part assemblies	Valve mounted Open Centre

PartNo	Pos	Qty	Name	Specifications
521782	1		Control valve	SDM 143/2 Included in valve set 313821, 313822
521822	1		Control valve	SDM 143/2 Included in valve set 313823, 313824
5044131	2	4	Quick Coupling	R 1/2"
5013853	3	4	Dowty washer	Tredo 1/2", Part is included in kit 60007907 Hose cpl., 9032177 Hose cpl.
5044129	4	4	Dust Cover	1/2" Male
1120065	5	2	Adaptor	R 3/4" - R 1/2" Included in valve set 313821, 313823
1120254	5	2 PCS	Adaptor	R 3/4" - R 3/4" Included in valve set 313822, 313824
5013854	7	2	Dowty washer	Tredo 3/4"
521683	8	1 PCS	Pressure Carry Over Adaptor	1/2" BSP Included in valve set 313821, 313823
521684	8	1	Pressure Carry Over Adaptor	3/4" BSP Included in valve set 313822, 313824
5037055	9	1 PCS	O-ring	Ø 23,52 x 1,78
5037054	10	1 PCS	O-ring	18,77 x 1,78 (70Sh)
519025	12		Plug	R 3/4"
302699	18	1 PCS	Valve plate	
5002051	19	4	Screw	M6S 8 x 20
5013101	20	4	Washer	BRB 8,4 x 16
313262		1 PCS	Mounting Kit	2 pcs
302697	50	2 PCS	• Adjusting Sleeve	
5016681	51	2	• Locking Ring	
302698	52	2 PCS	• Clamp	
5013112	53	4	• Washer	5,3x10x1,5
5002004	54	4 PCS	• Screw	M6S 5x 80
5016205	30	2	• Locking Pin	
5020346		1	MONO Handle	MK3

© 2025 Jost