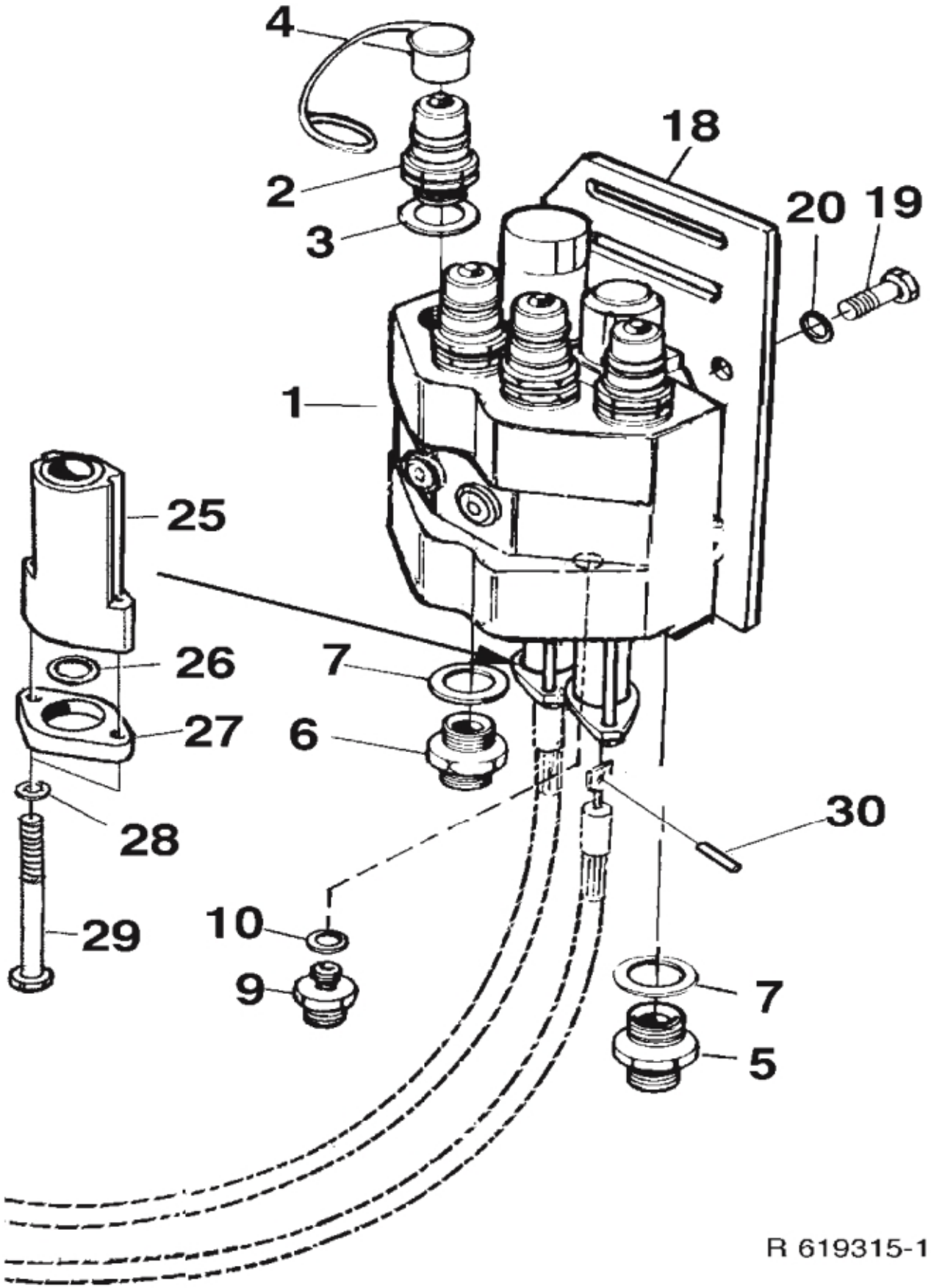

© 2025 Jost

Description	Walvoil DLM 142/2 LS
Part assemblies	Valve mounted LS

PartNo	Pos	Qty	Name	Specifications
521622	1	1 PCS	Control valve	DLM 142/ 2 Set No 313521
521632	1		Control valve	DLM 142/ 2 Set No 313551
5044131	2	4	Quick Coupling	R 1/2"
5013853	3	4	Dowty washer	Tredo 1/2", Part is included in kit 60007907 Hose cpl., 9032177 Hose cpl.
5044129	4	4	Dust Cover	1/2" Male
1120065	5	1	Adaptor	R 3/4" - R 1/2"
1120254	6	1 PCS	Adaptor	R 3/4" - R 3/4"
5013854	7	2	Dowty washer	Tredo 3/4"
1120354	9	1 PCS	Adaptor	R 1/4" - R 3/8"
5013856	10	1	Dowty washer	Tredo 1/4"
302699	18	1 PCS	Valve plate	
5002051	19	4	Screw	M6S 8 x 20
5013101	20	4	Washer	BRB 8,4 x 16
313262		1 PCS	Mounting Kit	2 pcs
302697	25	2 PCS	Adjusting Sleeve	
5016681	26	2	Locking Ring	
302698	27	2 PCS	Clamp	
5013112	28	4	Washer	5,3x10x1,5
5002004	29	4 PCS	Screw	M6S 5x 80
5016205	30	2	Locking Pin	

© 2025 Jost