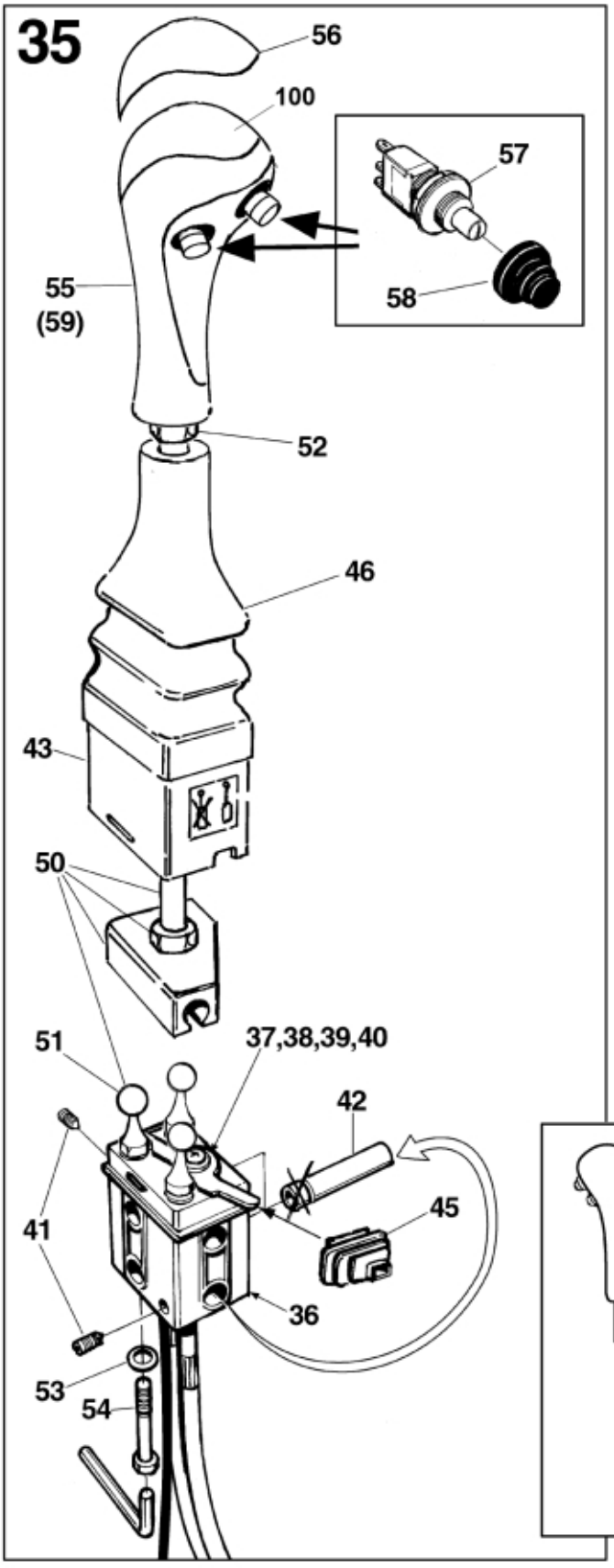

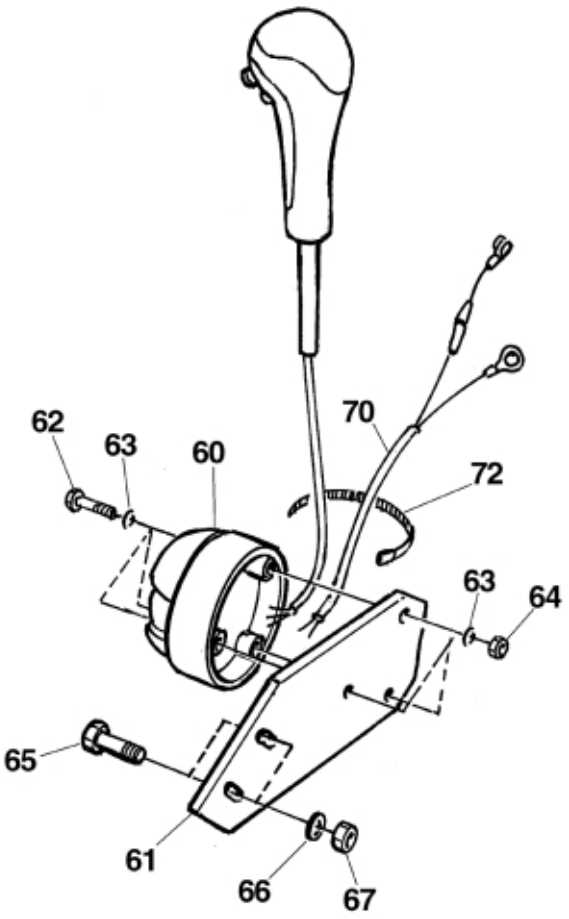

R 408005-1

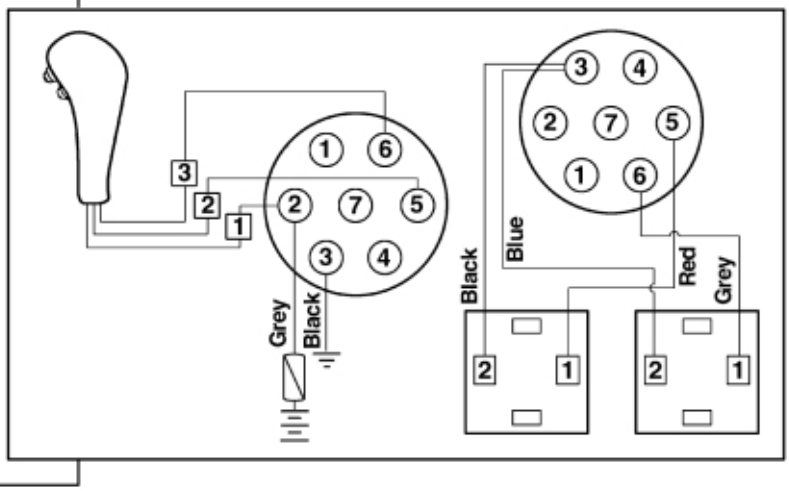

© 2025 Jost

Part assemblies		MONO Handle		
Specification		Specification: MK3		
PartNo	**Pos**	**Qty**	**Name**	**Specifications**
5020346	35		MONO Handle	MK3
5020382	36	1	Housing	
5020381	37	1	• Lock	
5002402	38	1	• Screw	840819
5013113	39	1	• Washer	A264296
5020342	40	1	• Locking spring	A294789
5020383	41	2	• Stop screw	M8x10
5020344	42	2	Spacer	
5020379	43	1	Collar	
5020384	45	1	Gaiter	
5020378	46	1	Gaiter	
5020373	50	1	Lever	
5020374	51	1	• Pivot post	
5046020		1	• Lubrication grease	Tube 10gr.
5011076	52	1	Nut	ML6M 4fzb
5013111	53	1	Washer	BRB 6,4 x 14
5004030	54	1	Screw	MC6S M6 x 45
5020387	55	1	Electr.Control Device	incl. harness
5020909	100	1	• Handle top	
5020386	56	1	•• Direction indicator	RH
5020385		1	•• Direction indicator	LH
5024365	57	2	• Switch	A 294813
5024366	58	2	• Boot	A 294814
5020377	59	1	• Handle	w/o switches
5020909	100	1	• Handle top	
5020386	56	1	•• Direction indicator	RH
313497		1	Electric mounting kit	
5024378	60	1	• Connector, female	7-Pole
5201142	61	1	• Connector Support	
5004003	62	3	• Screw	MC6S 5 x 35
5013112	63	6	• Washer	5,3x10x1,5
5011051	64	3	• Nut	M6M 5
5002077	65	2	• Screw	M6S 10x30
5013110	66	2	• Washer	BRB 10.5x22x2
5011054	67	2	• Nut	M6M M10
313476	70	1	• Electr. Cable	
5033621	72	5	• Cable tie	4.6x150

© 2025 Jost