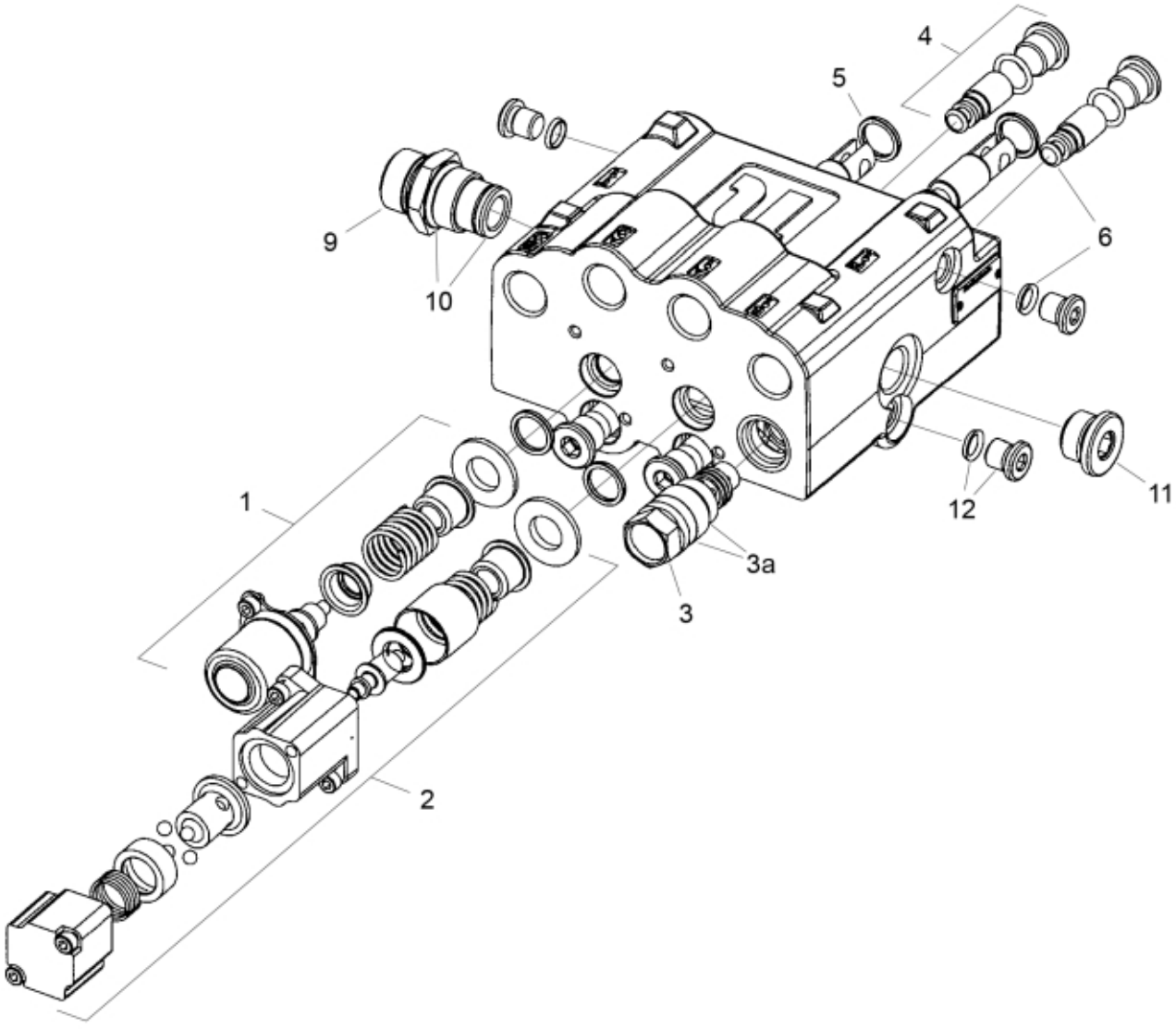

r10550062

© 2025 Jost

Description	Nordhydraulic RMC 202
Part assemblies	Valve

PartNo	Pos	Qty	Name	Specifications
10550063	1	1 PCS	Slide Control	
10550064	2	1 PCS	Slide Control	
10550065	3	1 PCS	Relief Valve	TBD 160 185 bar
10550066	3a	1 PCS	Sealing Set	
10550067	4	2 PCS	Check valve	MB01
10550068	5	2 PCS	Sealing Set	
10550069	6	1 PCS	Sealing Set	
521543	9	1 PCS	Pressure Carry Over Adaptor	1/2" BSP
521544	9	1 PCS	Pressure Carry Over Adaptor	3/4" BSP
10550072	9	1 PCS	Pressure Carry Over Adaptor	1 1/16" JIC
10550073	10	1 PCS	Sealing Set	
5045153	11	1	Plug	1/2" BSP (P1)
5034118	12	3 PCS	Plug	
10550074		1 PCS	Sealing Set Control Valve	

© 2025 Jost