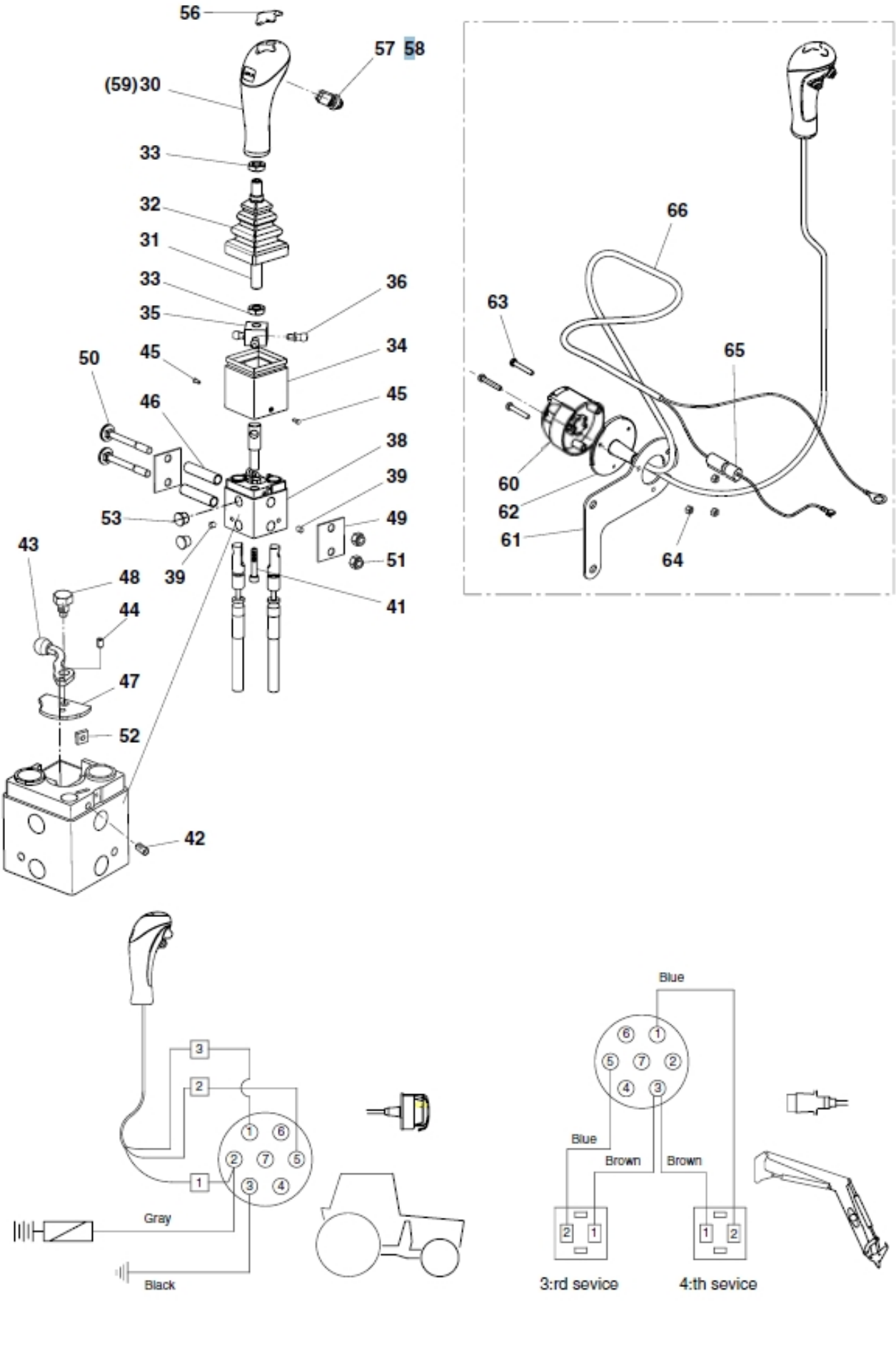
56
57 58
(59) 30
33
32
31
33
36
35
34
45
50
45
46
38
39
53
49
39
51
43
48
41
44
47
52
42
66
63
65
60
62
61
64
3
2
1
6
7
5
4
3
Gray
Black
Blue
Blue
Brown
Brown
2
1
1
2
3:rd sevice
4:th sevice

© 2025 Jost

Description	with 2 push buttons
Part assemblies	Control lever

PartNo	Pos	Qty	Name	Specifications
20432363	31	1	Pipe	432363
20432342	32	1	Bellows	432342
5011076	33	1	Nut	ML6M 4fzb
20432352	34	1	Cover	432352
20432337	35	1	Centre cross	432337
20731858	36	3	Pivot	731858
20432335	37	1	Fulcrum joint	432335
20432351	38	1	Housing	432351
20705055	39	2	Stop screw	705055
5013108	40	1	Washer	BRB 6,4 x 12 x 1,5
5004032	41	1	Screw	MC6S M6x35
20705139	42	1	Screw	705139
20432361	43	1	Arm	432361
20725590	44	1	Spring pin	725590
20705123	45	2	Screw	705123
20432345	46	2	Spacer tube	432345
20432348	47	1	Locking washer	432348
20432350	48	1	Screw	432350
20432353	49	1	Spacer plate	432353
5005620	50	2	Screw	
20707039	51	2	Nut	
20707046	52	1	Nut	707046
20719353	53	1	Cap	
5020386	56	1	Direction indicator	RH RH
5020385	56	1	Direction indicator	LH LH
5024365	57	2	Switch	A 294813
5024366	58	2	Boot	A 294814
5020377	59	1	Handle	w/o switches
5024378	60	1	Connector, female	7-Pole
20431861	61	1	Bracket	431861
5102039	62	1	Rubber boot	For caravan connector
20705267	63	3	Screw	705267
20708136	64	3	Nut	708136
5024356	65	1	Fuse holder	8 Amp
313476	66	1	Electr. Cable	

© 2025 Jost