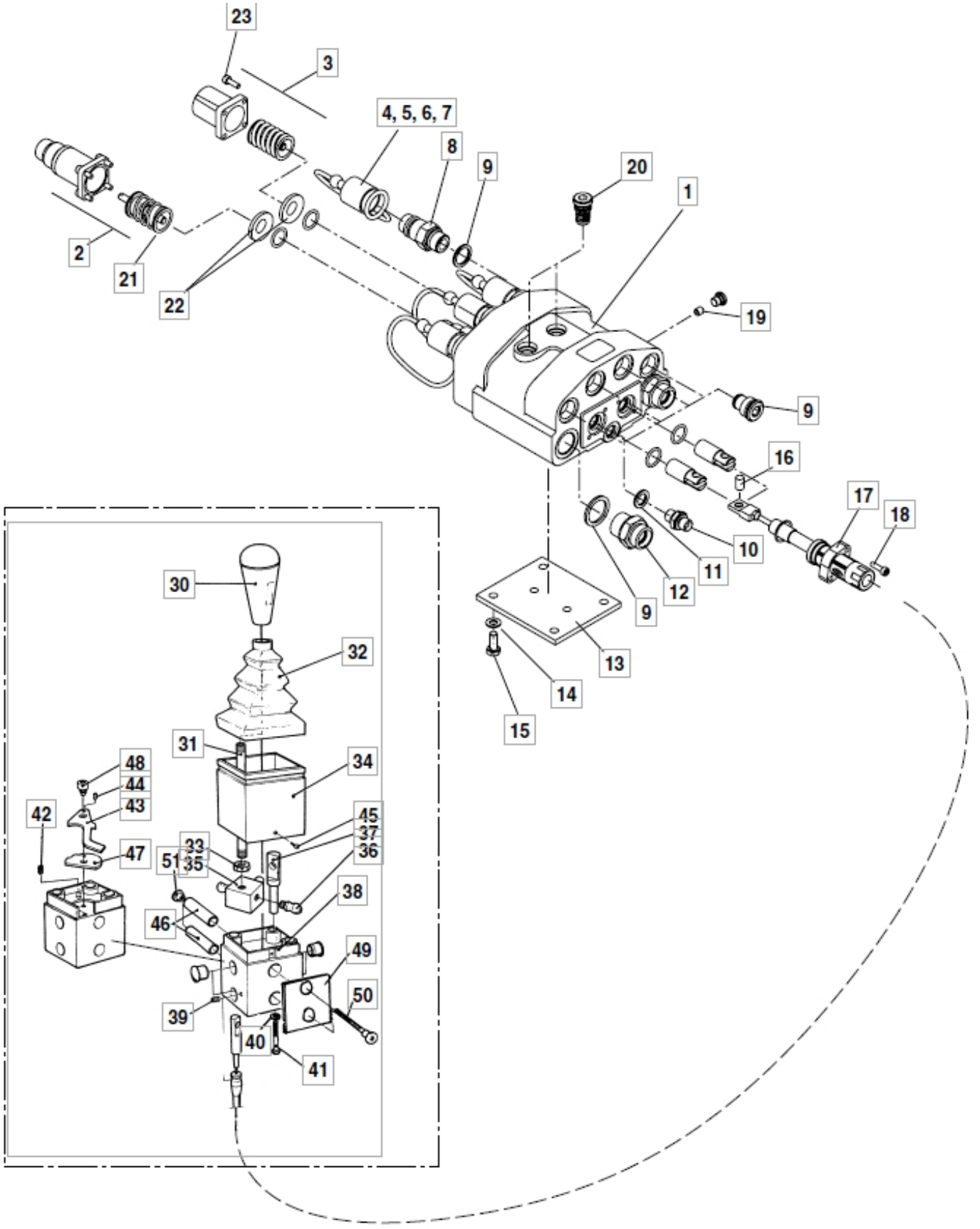
23
3
4, 5, 6, 7
8
9
20
1
2
21
22
19
9
16
17
18
10
11
12
9
13
14
15
30
32
31
34
48
44
43
42
47
45
37
36
33
51
35
38
46
49
50
39
40
41

© 2025 Jost

Description	Walvoil valve
Part assemblies	Trima Mono handle Load sensing
Specification	Year From: 8/1/2000 12:00:00 AM
	Year To: 12/31/2001 12:00:00 AM

PartNo	Pos	Qty	Name	Specifications
20430286	2	2 PCS	Spool control	430286 LH
20430287	3	2 PCS	Spool control	
5044129	4	1	Dust Cover	1/2" Male
5044129	5	1	Dust Cover	1/2" Male
5044129	6	1	Dust Cover	1/2" Male
5044129	7	1	Dust Cover	1/2" Male
5044131	8	4	Quick Coupling	R 1/2"
5013853	9	6	Dowty washer	Tredo 1/2", Part is included in kit 60007907 Hose cpl., 9032177 Hose cpl.
20717403	10	1	Adaptor	717403
5013856	11	1	Dowty washer	Tredo 1/4"
20717391	12	2	Adaptor	M26x1,5 R3/4", 717391
20537814	13	1 PCS	Bracket	
5013101	14	4	Washer	BRB 8,4 x 16
5002051	15	4	Screw	M6S 8 x 20
20430291	16	2 PCS	Pin	430291
20430292	17	2 PCS	Adjusting cap	430292
20700614	18	4 PCS	Screw	
20430296	19	1 PCS	Restrictor	
20430290	20	2 PCS	Check valve	430290
20430293	21	2 PCS	Spring	
20430294	22	2 PCS	Washer	430294
20701613	23	8 PCS	Screw	
20431300	30	1	Knob	431300
20432363	31	1	Pipe	432363
20432342	32	1	Bellows	432342
5011076	33	1	Nut	ML6M 4fzb
20432352	34	1	Cover	432352
20432337	35	1	Centre cross	432337
20731858	36	3	Pivot	731858
20432335	37	1	Fulcrum joint	432335
20432351	38	1	Housing	432351
20705055	39	2	Stop screw	705055
5013108	40	1	Washer	BRB 6,4 x 12 x 1,5
5004032	41	1	Screw	MC6S M6x35
20705139	42	1	Screw	705139
20432361	43	1	Arm	432361
20725590	44	1	Spring pin	725590
20705123	45	2	Screw	705123
20432345	46	2	Spacer tube	432345
20432348	47	1	Locking washer	432348
20432350	48	1	Screw	432350
20432353	49	1	Spacer plate	432353
20705140	50	2	Screw	705140
20707039	51	2	Nut	
20430295		1	Spool seal kit	430295

© 2025 Jost