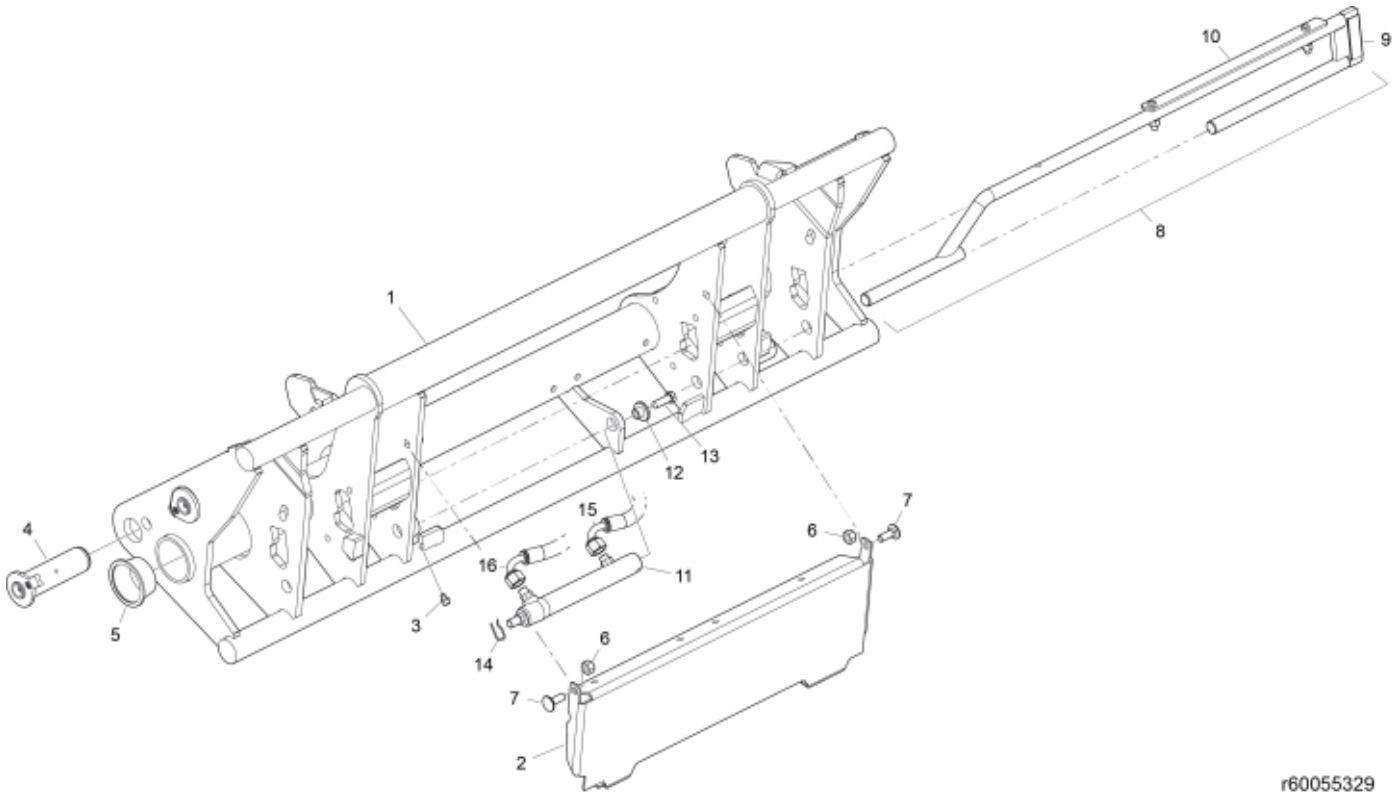

© 2025 Jost

Description	Tool carrier
Part assemblies	Euro/SMS DL Hydraulic
Specification	Specification: Black Texture
	Year From: 3/15/2021 12:00:00 AM

PartNo	Pos	Qty	Name	Specifications
60055329-17		1 PCS	Euro/SMS DL Hydraulic	Black Texture, 3/15/2021 12:00:00 AM
60055318-17	1	1 PCS	Tool carrier	
60049164-17	2	1 PCS	Cover plate	Black Texture
5023005	3	2	Greaser	M 10 x 1
60006415	4	4	Pin	D40 L=134
5221573	5	2	Plastic cover	
5011554	6	2	Nut	Loc-King M10
5006002	7	2	Screw	MVBF 10x30
4501175	8	1	Locking mechanism cpl. (DL Hyd)	Replaces 60013275 and 4501165
60039148	9	1	• Plastic handle	
60048150	10	1 PCS	• Guide plate	Replaces 60013927
60103722	11	1	Cylinder	
60006448	12	1	Sleeve	
5002971	13	1	Screw	M6S 10x30 Drilock
60020459	14	1	Locking Pin	
60018858	15	1	Hose	1/4" L=1430 1/4G90LM - 1/4GRLM
60018856	16	1	Hose	1/4" L=1590 1/4G90LM - 1/4GRLM

© 2025 Jost