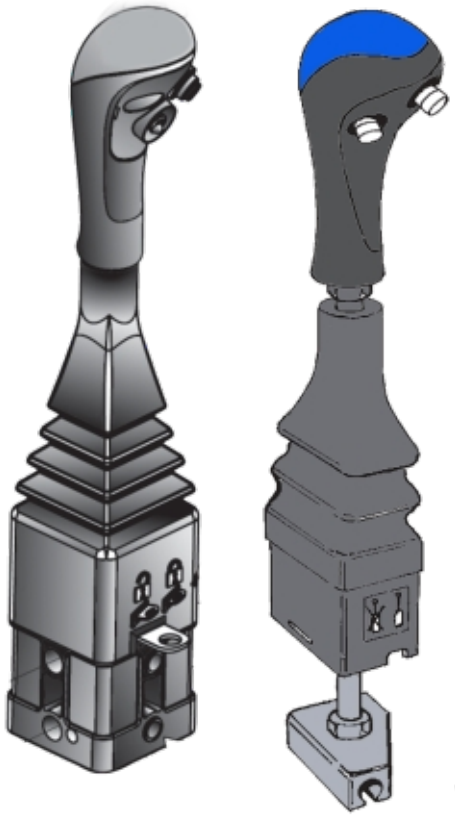

Valves:

Walvoil SDM8/2, 143/2;
DLSM 8/2; 142/2

Parker (Commercial) Km81
Km82, Km85, Km 86

Nordhydraulic RMT, RMC 202

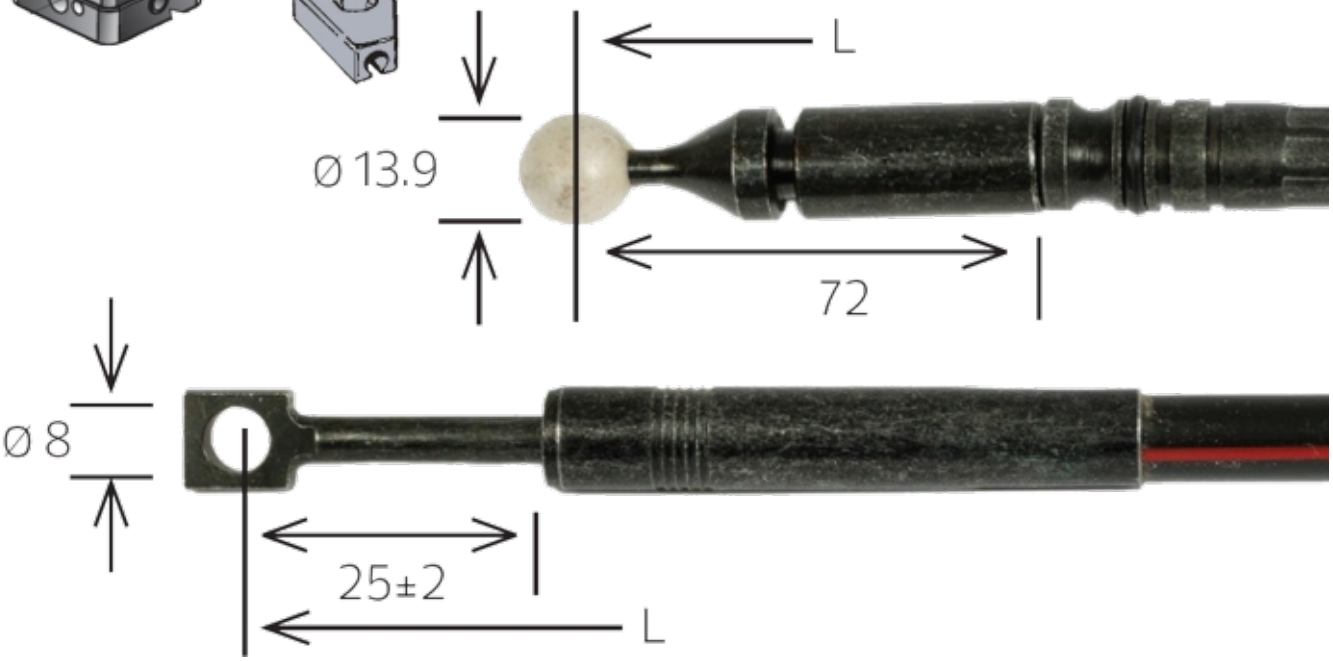

© 2025 Jost

Description	Ergo
Part assemblies	Control cables

PartNo	Pos	Qty	Name	Specifications
5021130		2	Cable	L=800mm
5021132		2	Cable	L=1000mm
5020940		2	Control cable	L=1200mm (5020351)
5020941		2	Control cable	L=1400mm (5020352)
5020942		2	Control cable	L=1600mm (5020353)
5020943		2	Control cable	L=1800mm (5020354)
5020944		2	Control cable	L=2000mm (5020355)
5020945		2	Control cable	L=2200mm (5020356)
5020946		2	Control cable	L=2400mm (5020357)
5020947		2	Control cable	L=2600mm (5020358)

© 2025 Jost