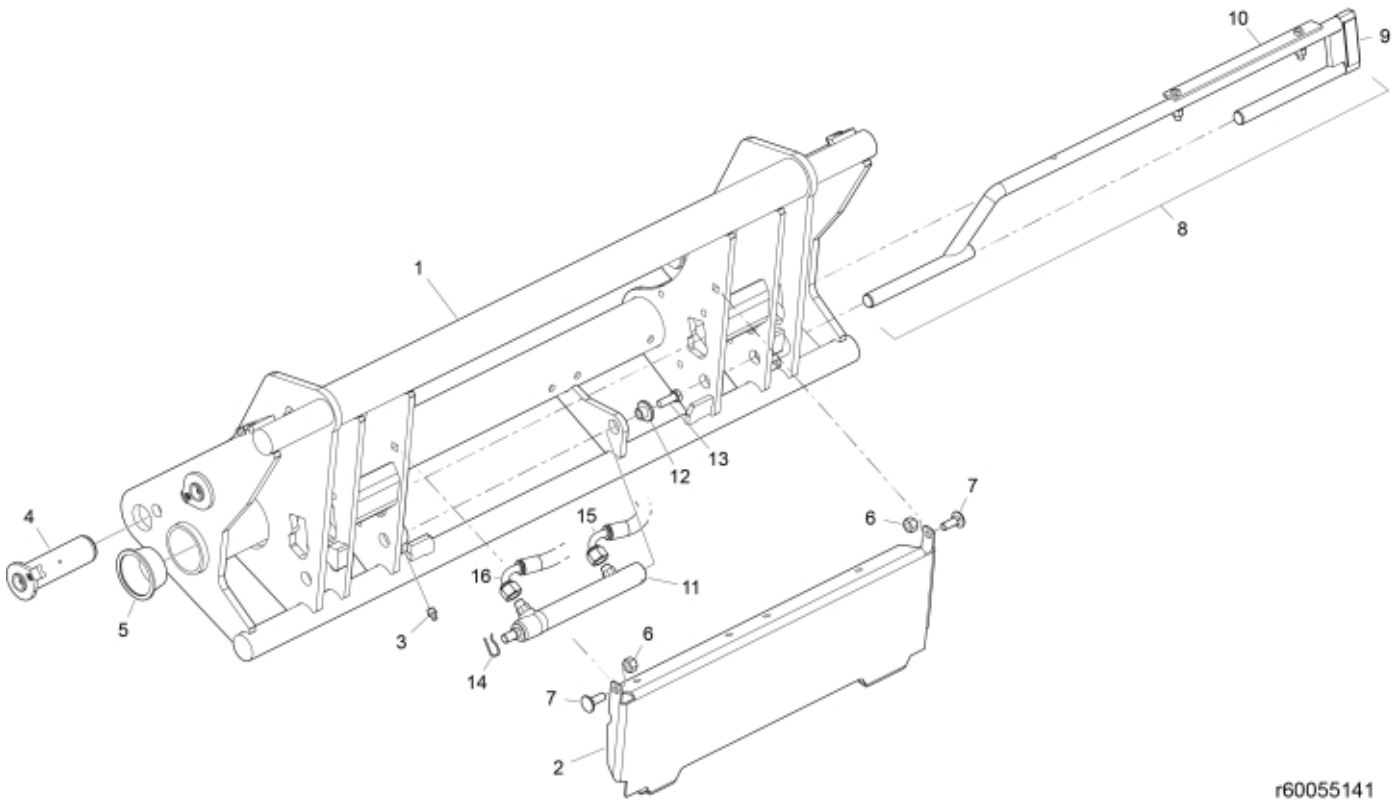



© 2025 Jost

| | |
|---|---|
| **Description** | Tool carrier |
| **Part assemblies** | Euro/SMS Hydraulic |
| **Specification** | Year From: 12/7/2020 12:00:00 AM |

| PartNo | Pos | Qty | Name | Specifications |
|---|---|---|---|---|
| 60045313-19 | 1 | 1 | Tool carrier | |
| 60049164-19 | 2 | 1 | Cover plate | MF Red |
| 5023005 | 3 | 2 | Greaser | M 10 x 1 |
| 60006415 | 4 | 4 | Pin | D40 L=134 |
| 5221573 | 5 | 2 | Plastic cover | |
| 5011554 | 6 | 2 | Nut | Loc-King M10 |
| 5006002 | 7 | 2 | Screw | MVBF 10x30 |
| 4501176 | 8 | 1 | Locking mechanism cpl. (DM Hyd) | Euro/SMS, Replaces 60012441 and 4501167 |
| 60039148 | 9 | 1 | • Plastic handle | |
| 60048147 | 10 | 1 | • Guide plate | Replaces 60013414 |
| 60103722 | 11 | 1 | Cylinder | |
| 60006448 | 12 | 1 | Sleeve | |
| 5002971 | 13 | 2 | Screw | M6S 10x30 Drilock |
| 60020459 | 14 | 2 | Locking Pin | |
| 60009522 | 15 | 1 | Hose | 1/4" L=1280 1/4G90LM - 1/4GRLM |
| 60009523 | 16 | 1 | Hose | 1/4" L=1430 1/4G90LM - 1/4GRLM |


© 2025 Jost