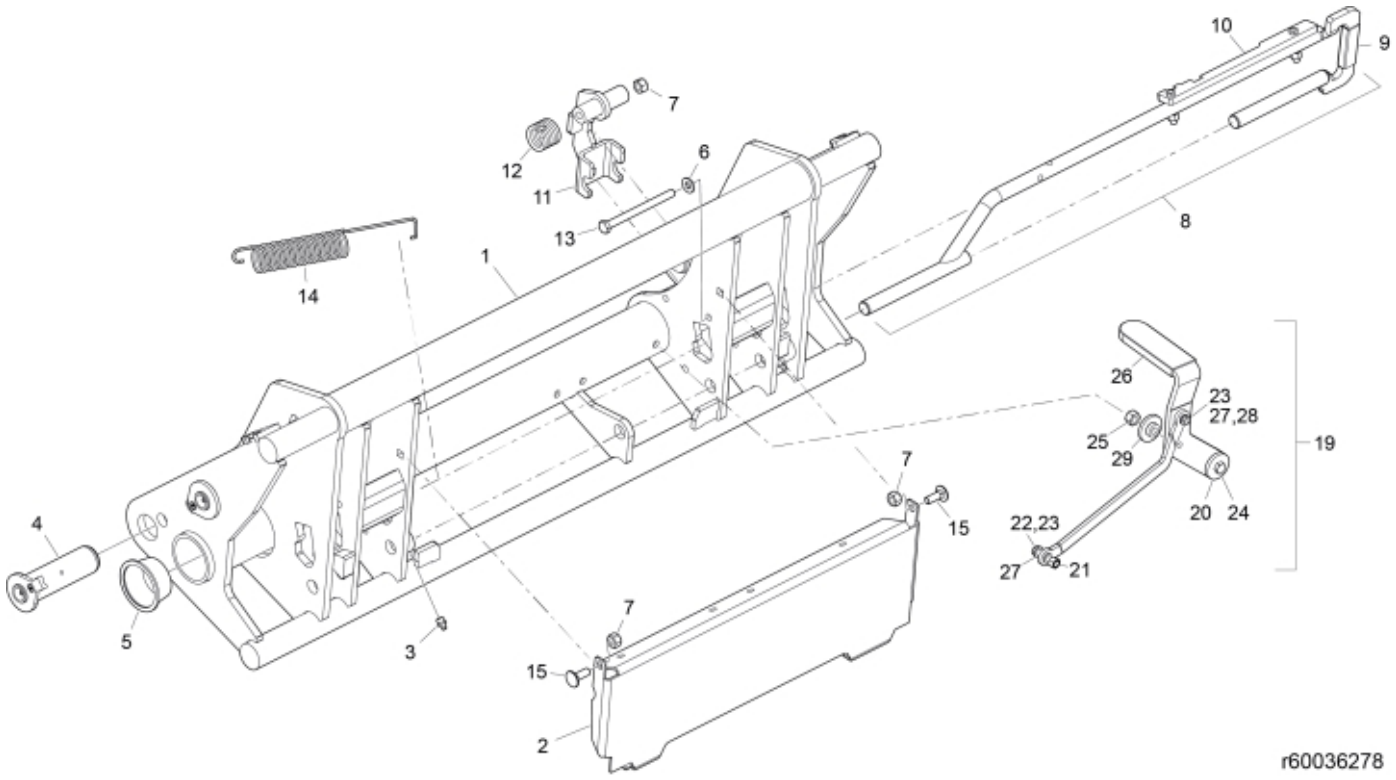
10
9
7
12
6
11
13
8
1
14
26
23
27,28
25
29
19
7
4
15
22,23
20
24
27
21
7
5
3
15
2
r60036278

© 2025 Jost

Description	Tool carrier
Part assemblies	Euro/SMS
Specification	Year From: 12/7/2020 12:00:00 AM

PartNo	Pos	Qty	Name	Specifications
60045313-1	1	1 PCS	Tool carrier	Glossy Black
60049164-1	2	1 PCS	Cover plate	Glossy Black
5023005	3	2	Greaser	M 10 x 1
60006415	4	4	Pin	D40 L=134
5221573	5	2	Plastic cover	
5013110	6	1	Washer	BRB 10.5x22x2
5011554	7	3	Nut	Loc-King M10
4501164	8	1	Locking mechanism cpl.	Euro/SMS, Replaces 60012441
60039148	9	1	• Plastic handle	
60011442	10	1	• Guide plate	
60007627	11	1	Click-on	
5051511	12	1	Spring	
5050455	13	1	Screw	M6S M10x130
60013324	14	1	Spring	
5006002	15	2	Screw	MVBF 10x30
60015857	19	1	Locking mechanism cpl.	
60009693	20	1	• Plate	
5002055	21	1	• Screw	M6S M8x40
5013101	22	1	• Washer	BRB 8,4 x 16
5011553	23	2	• Nut	M6M M8 Loc-king
5002091	24	1	• Screw	M6S 10x120
5011554	25	1	• Nut	Loc-King M10
5022144	26	1	• Cover	
60038758	27	2	• Spacer	
5002053	28	1	• Screw	M6S 8 x 30
60009557	29	1	• Sleeve	

© 2025 Jost