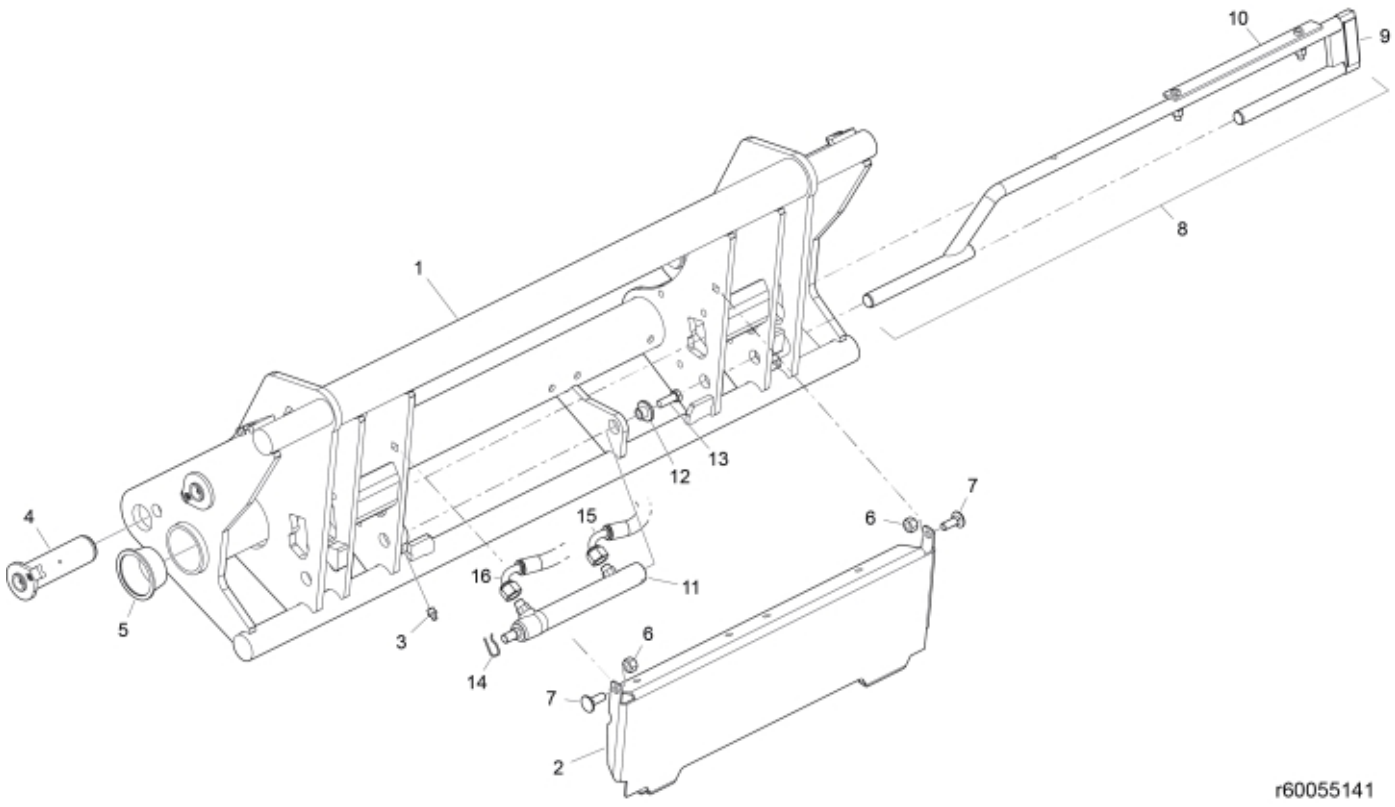

© 2025 Jost

Description	Tool carrier
Part assemblies	Euro/SMS Hydraulic
Specification	Year From: 12/7/2020 12:00:00 AM

PartNo	Pos	Qty	Name	Specifications
60045313-1	1	1 PCS	Tool carrier	Glossy Black
60049164-1	2	1 PCS	Cover plate	Glossy Black
5023005	3	2	Greaser	M 10 x 1
60006415	4	4	Pin	D40 L=134
5221573	5	2	Plastic cover	
5011554	6	2	Nut	Loc-King M10
5006002	7	2	Screw	MVBF 10x30
4501176	8	1	Locking mechanism cpl. (DM Hyd)	Euro/SMS, Replaces 60012441 and 4501167
60039148	9	1	• Plastic handle	
60048147	10	1	• Guide plate	Replaces 60013414
60103722	11	1	Cylinder	
60006448	12	1	Sleeve	
5002971	13	2	Screw	M6S 10x30 Drilock
60020459	14	2	Locking Pin	
60009522	15	1	Hose	1/4" L=1280 1/4G90LM - 1/4GRLM
60009523	16	1	Hose	1/4" L=1430 1/4G90LM - 1/4GRLM

© 2025 Jost