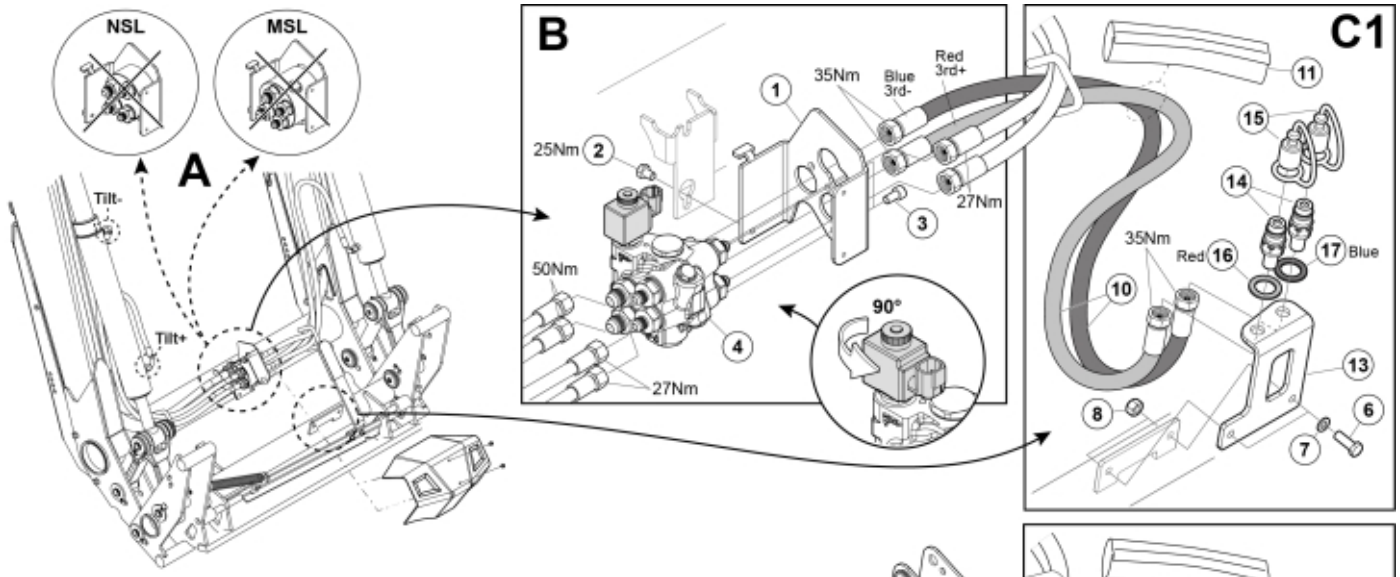

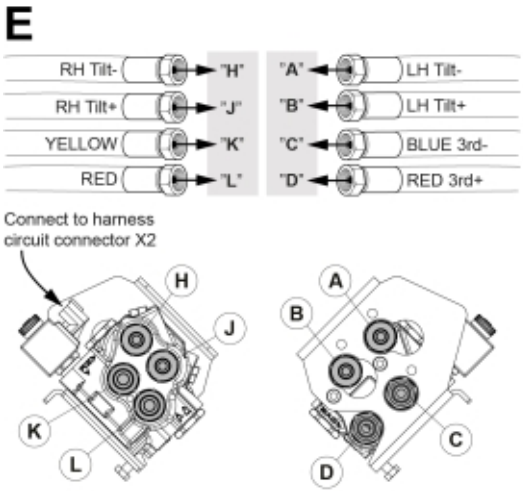

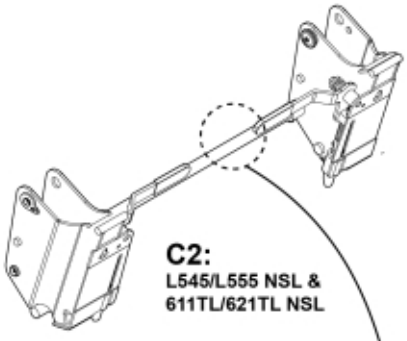

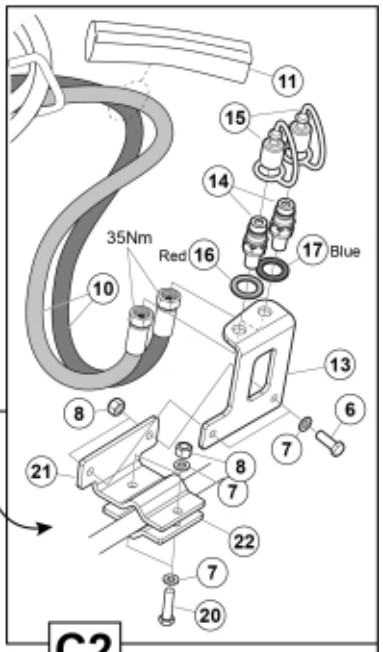

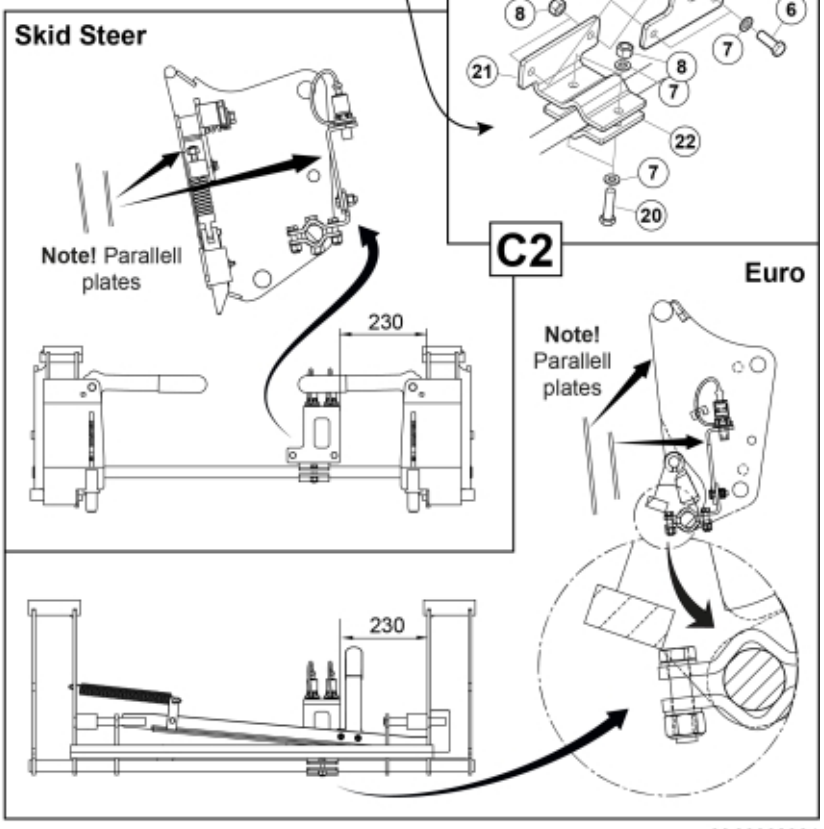

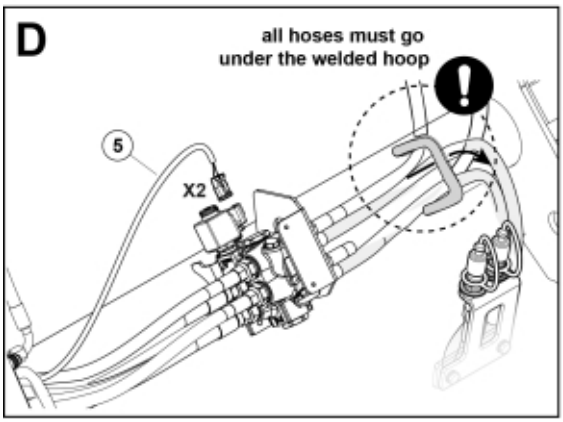

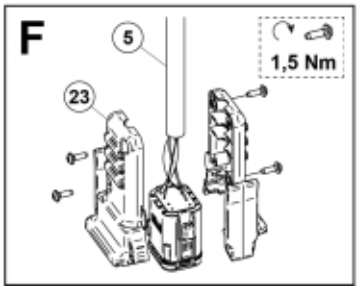

M 60062981

© 2025 Jost

Part assemblies	3rd service, ISO-A
Specification	Year From: 12/14/2020 12:00:00 AM

8-pin Pilot:8-pin Deutsch with pilot controlled valve

PartNo	Pos	Qty	Name	Specifications
60057024	1	1	Bracket	
5002060	2	1	Screw	M6S M8x12 (8,8)
5050342	3	1	Screw	MC6S M8x14 (8.8)
4501187	4	1	Block cpl	3rd service
59050126	5	1 PCS	Harness	8-pin Deutsch
5002077	6	2	Screw	M6S 10x30
5013102	7	6	Washer	BRB 10 x 18 x 2
5011554	8	4	Nut	Loc-King M10
60058442	10	2	Hose	3/8" L=950 3/8GRLM - 3/8GRLM
60058429	11	1	Hose cover	
5222580	13	1	Bracket	
5044940	14	2	Coupling	ISO-A 1/2" Male - G3/8
5044129	15	2	Dust Cover	1/2" Male
5022157	16	1	Washer, red	
5022159	17	1	Washer, blue	
5022177	18	1	Cable tie	Red
5022179	19	1	Cable tie	Blue
5002078	20	2	Screw	M6S 10x40 (8.8)
60062989	21	1 PCS	Bracket	
60006548	22	1 PCS	Bracket	
5103054	23	1	Connector handle	

© 2025 Jost