A

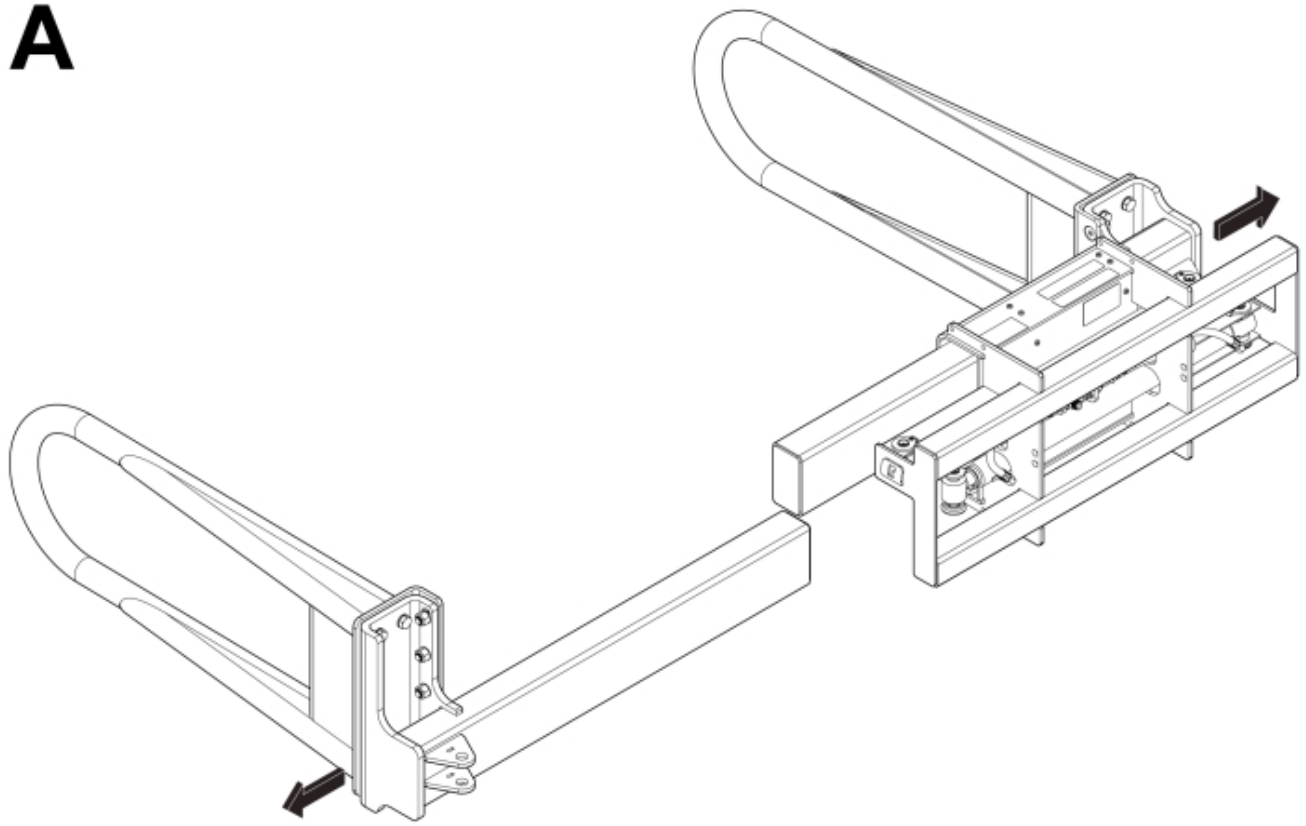

B

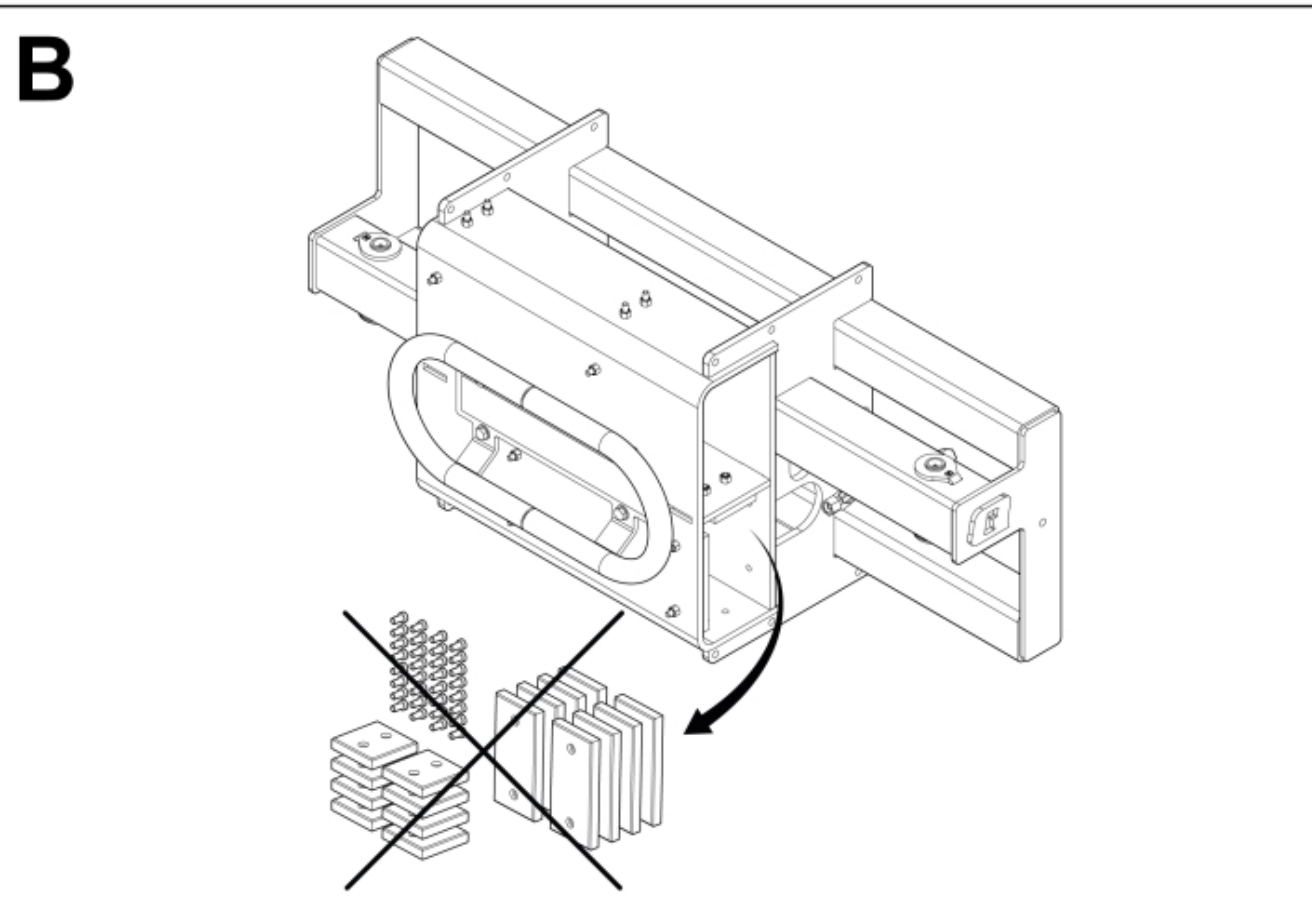

M 60064453_1

© 2025 Jost

C

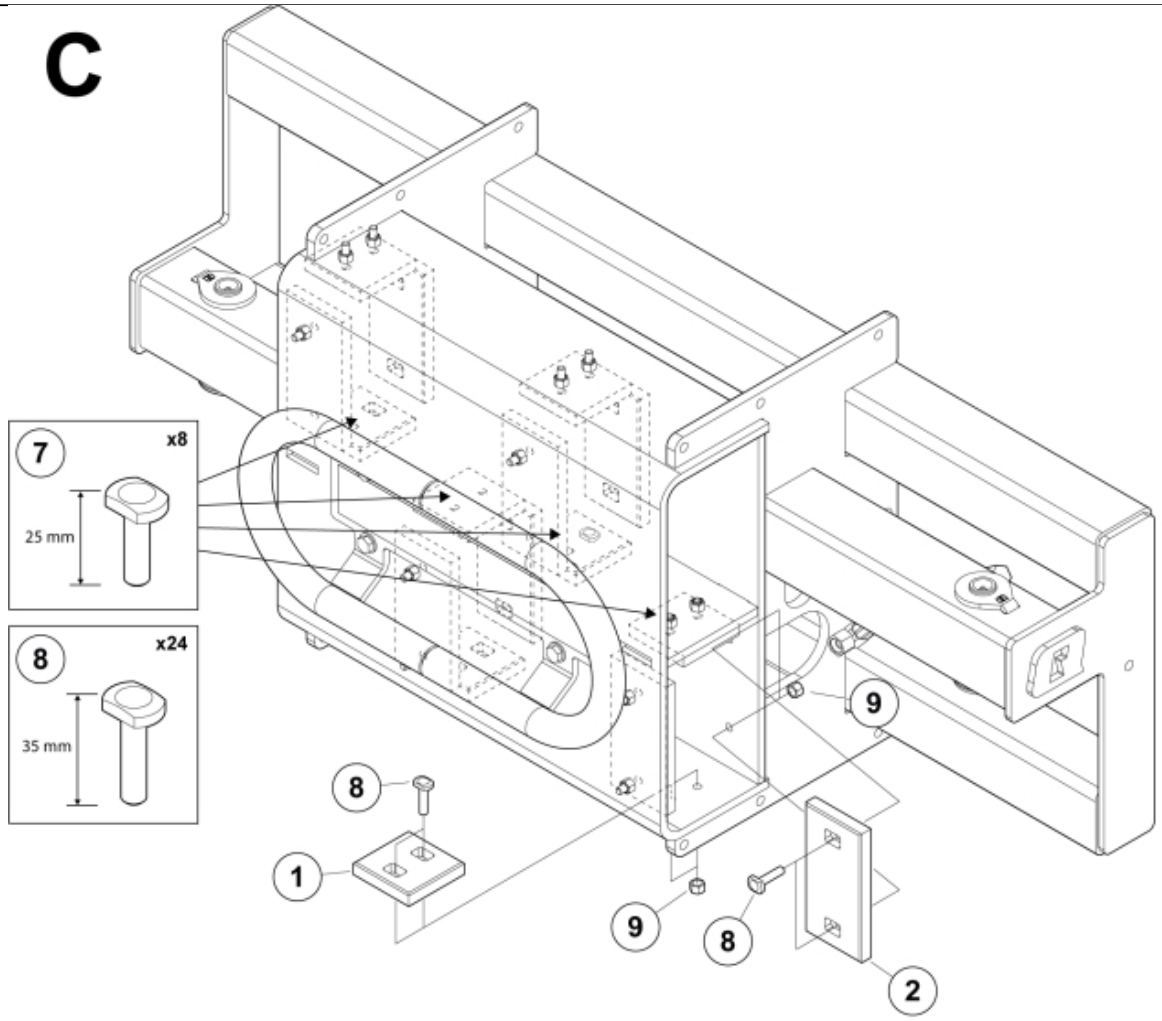

D

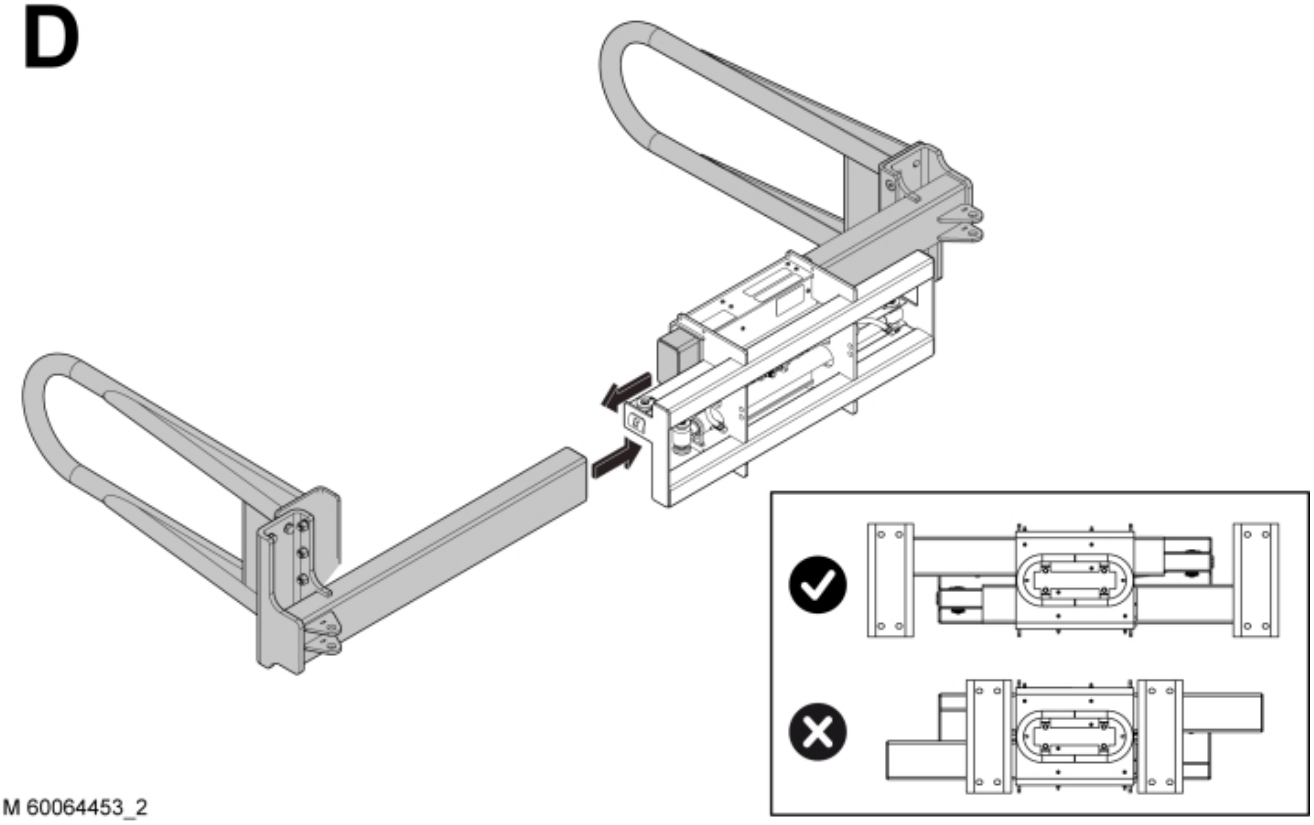

M 60064453_2

© 2025 Jost

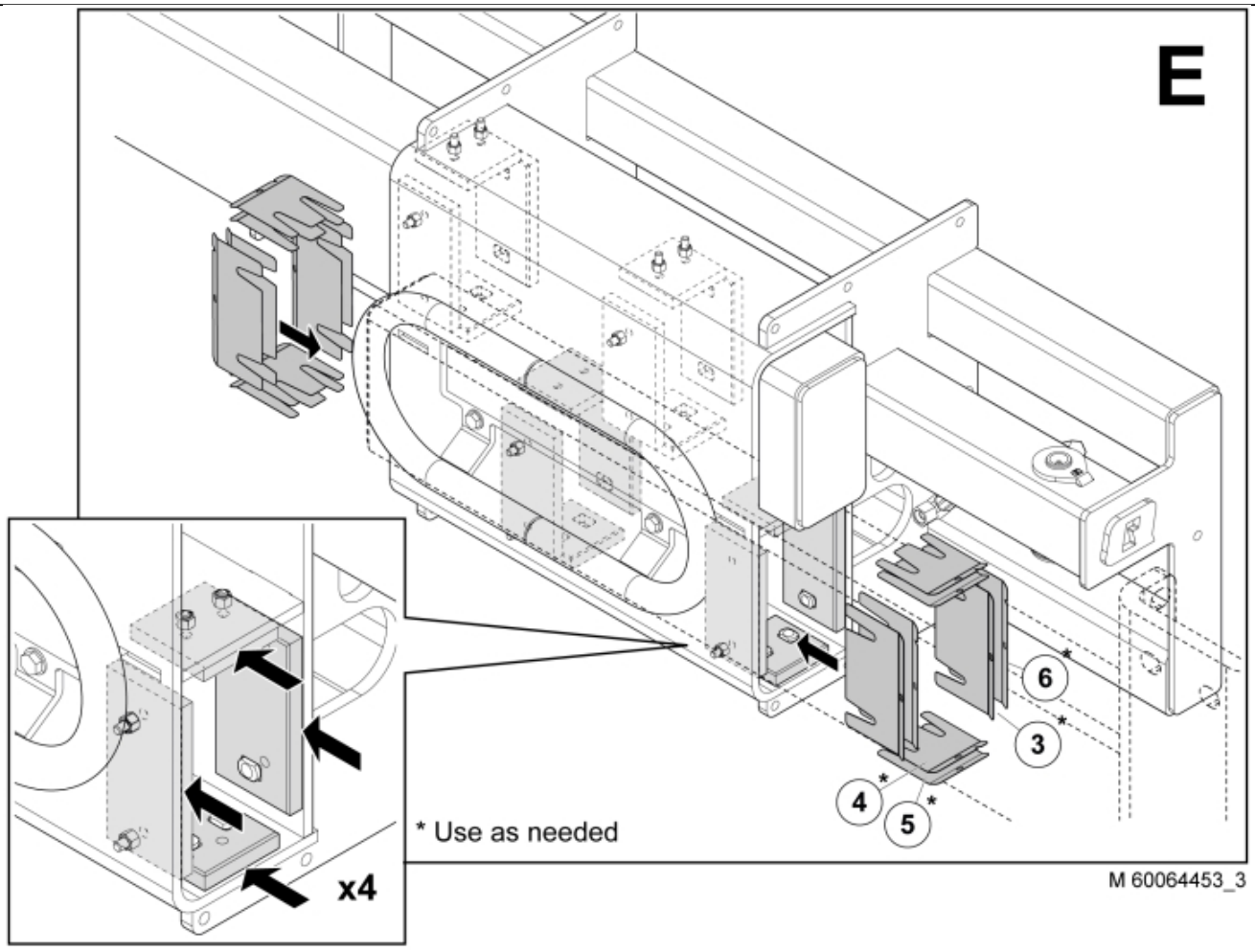

M 60064453_3

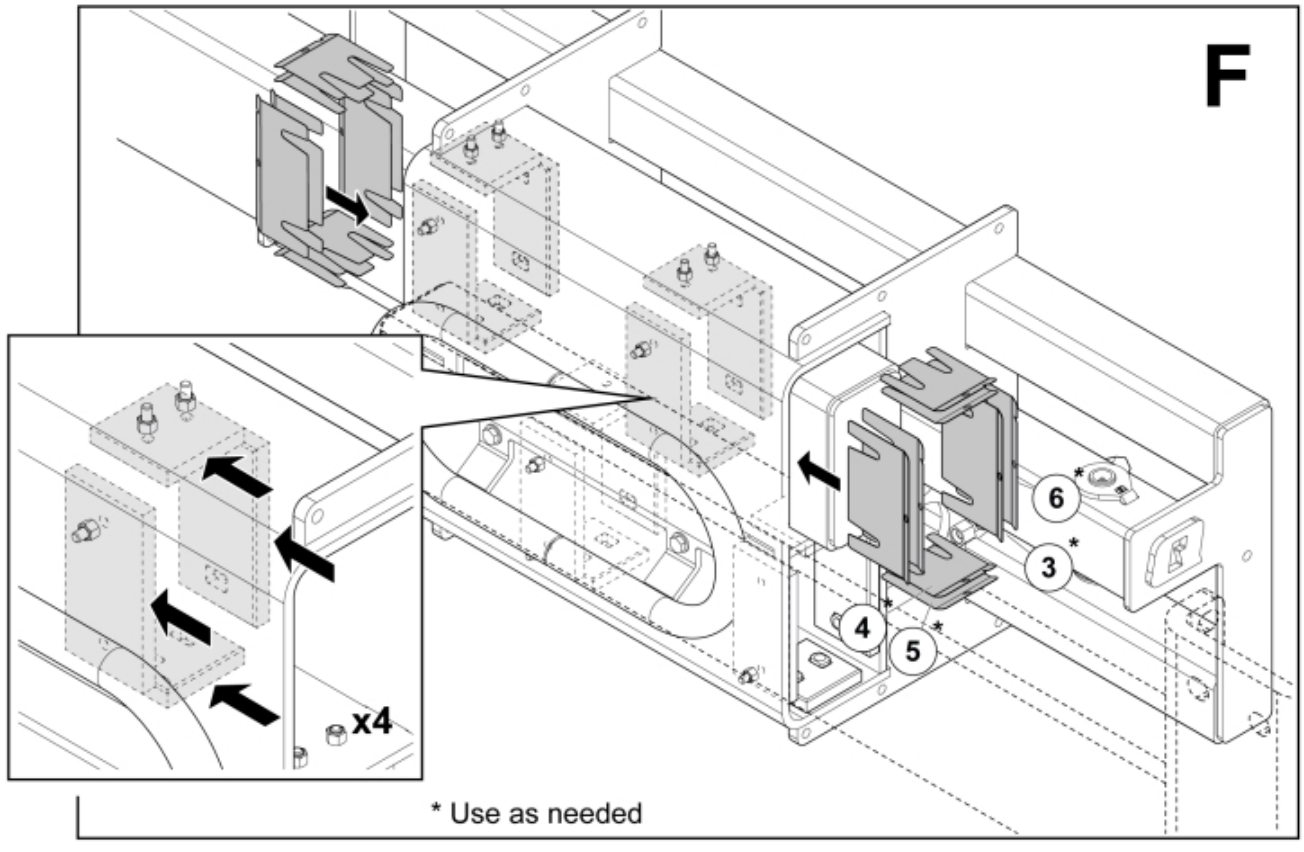

© 2025 Jost

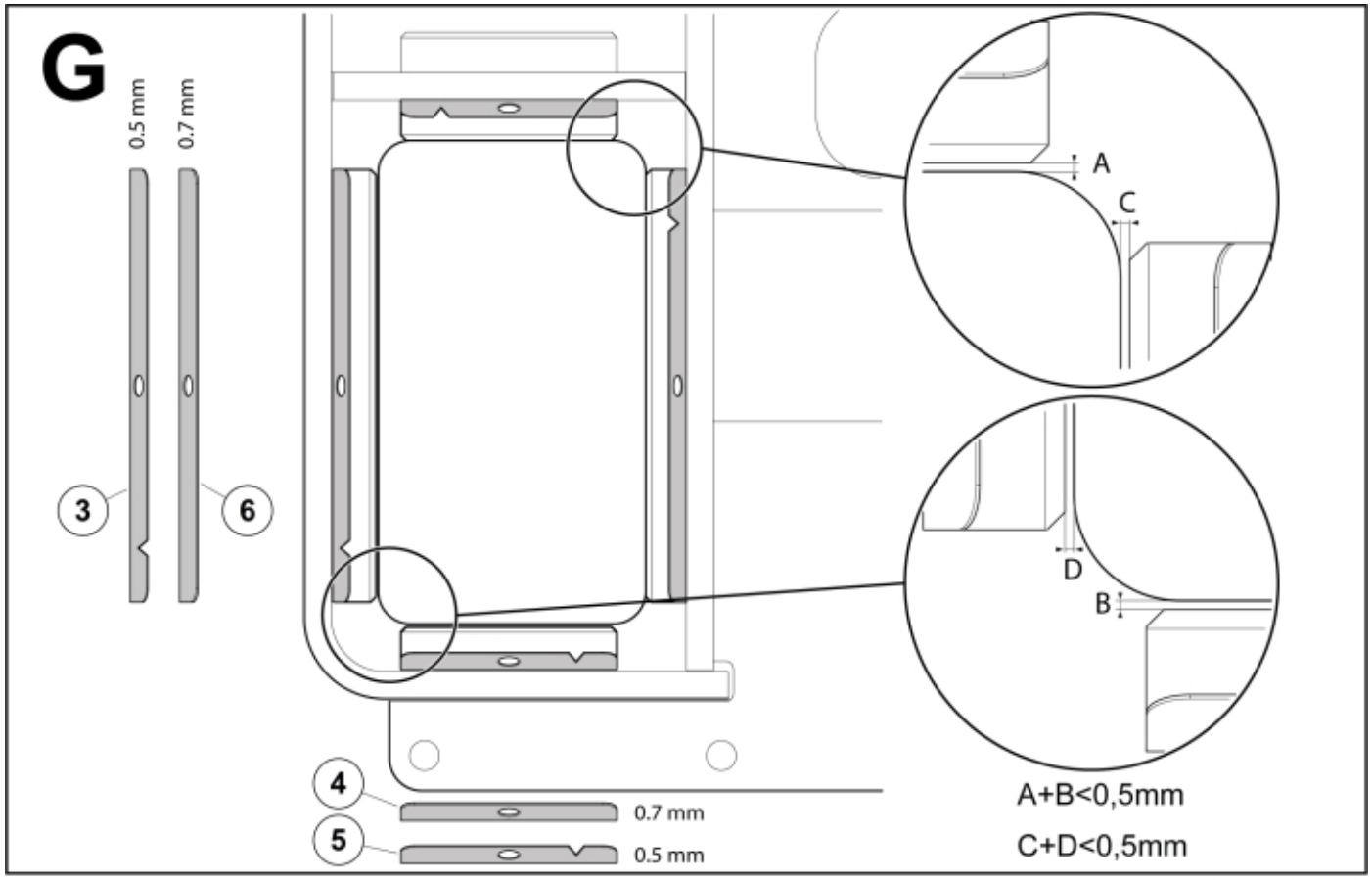

M 60064453_4

© 2025 Jost

Part assemblies Service kit

PartNo	Pos	Qty	Name	Specifications
60064453		1	Service kit	
	1	8 PCS	Slide plate	
	2	8 PCS	Slide plate	
60061080	3	8 PCS	Spacer plate	160x80x0.5 mm
60061084	4	8 PCS	Spacer plate	80x80x0.7 mm
60061083	5	8 PCS	Spacer plate	80x80x0.5 mm
60061081	6	8 PCS	Spacer plate	160x80x0.7 mm
5052058	7	8 PCS	Screw	M8x25 8.8
5052013	8	24 PCS	Screw	M8x35 8.8
5011553	9	32	Nut	M6M M8 Loc-king

© 2025 Jost