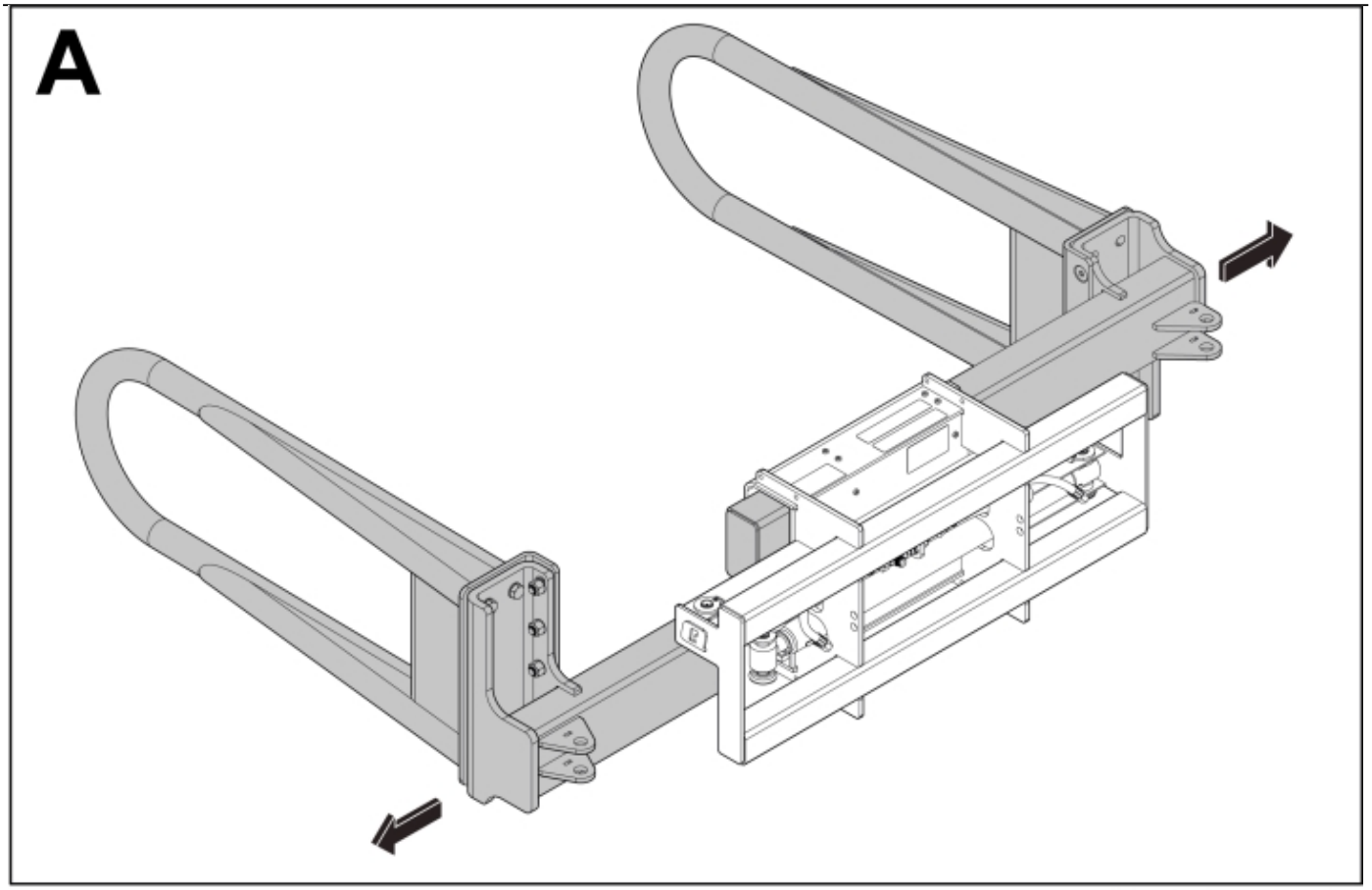

M 60064450-60065071_1

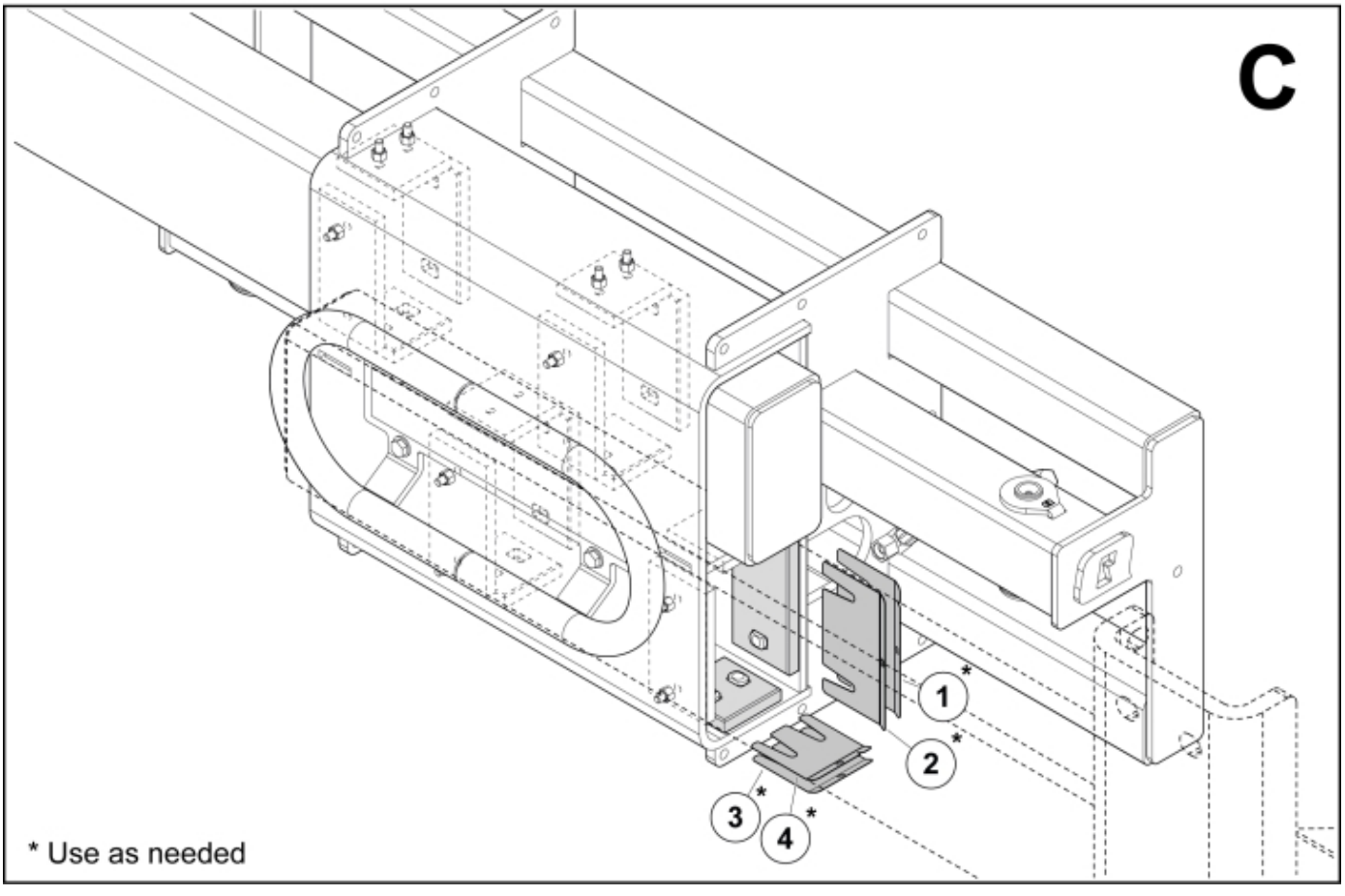

© 2025 Jost

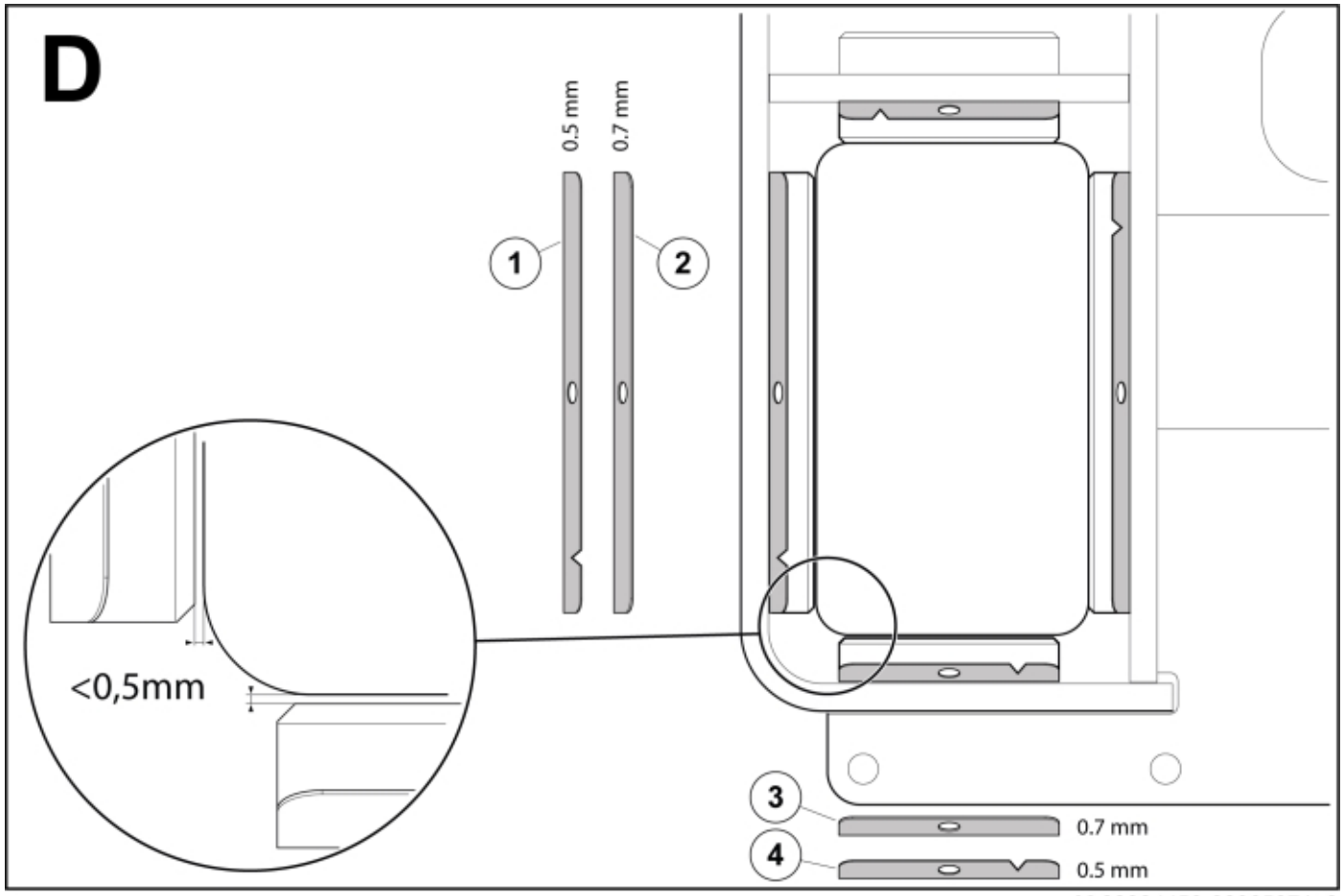

M 60064450-60065071_2

© 2025 Jost

Part assemblies	Service kit

PartNo	Pos	Qty	Name	Specifications
60064450		1	Service kit	
60061080	1	4 PCS	Spacer plate	160x80x0.5 mm
60061081	2	4 PCS	Spacer plate	160x80x0.7 mm
60061084	3	4 PCS	Spacer plate	80x80x0.7 mm
60061083	4	4 PCS	Spacer plate	80x80x0.5 mm

© 2025 Jost