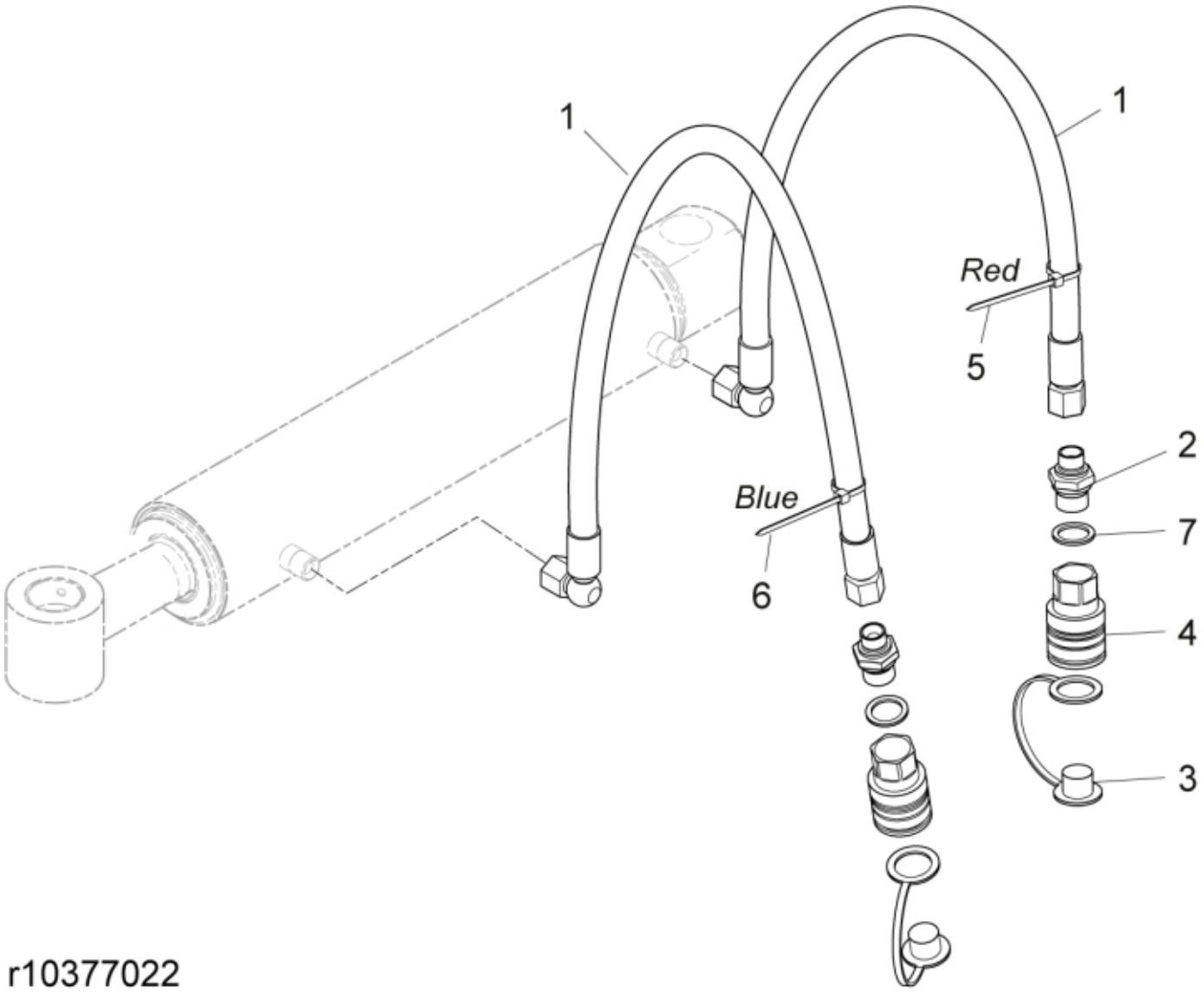

r10377022

© 2025 Jost

Part assemblies Hose kit

PartNo	Pos	Qty	Name	Specifications
1103117	1	2	Hose	3/8"
1120011	2	2	Adaptor	R1/2"-R3/8"
5044130	3	2	Dust Cover	Part is included in kit 60007907 Hose cpl., 9032177 Hose cpl.
5044127	4	2	Quick Coupling	1/2", Part is included in kit 60007907 Hose cpl., 9032177 Hose cpl.
5022177	5	1	Cable tie	Red
5022179	6	1	Cable tie	Blue
5013604	7	2	Washer	Copper 21x28x2

© 2025 Jost