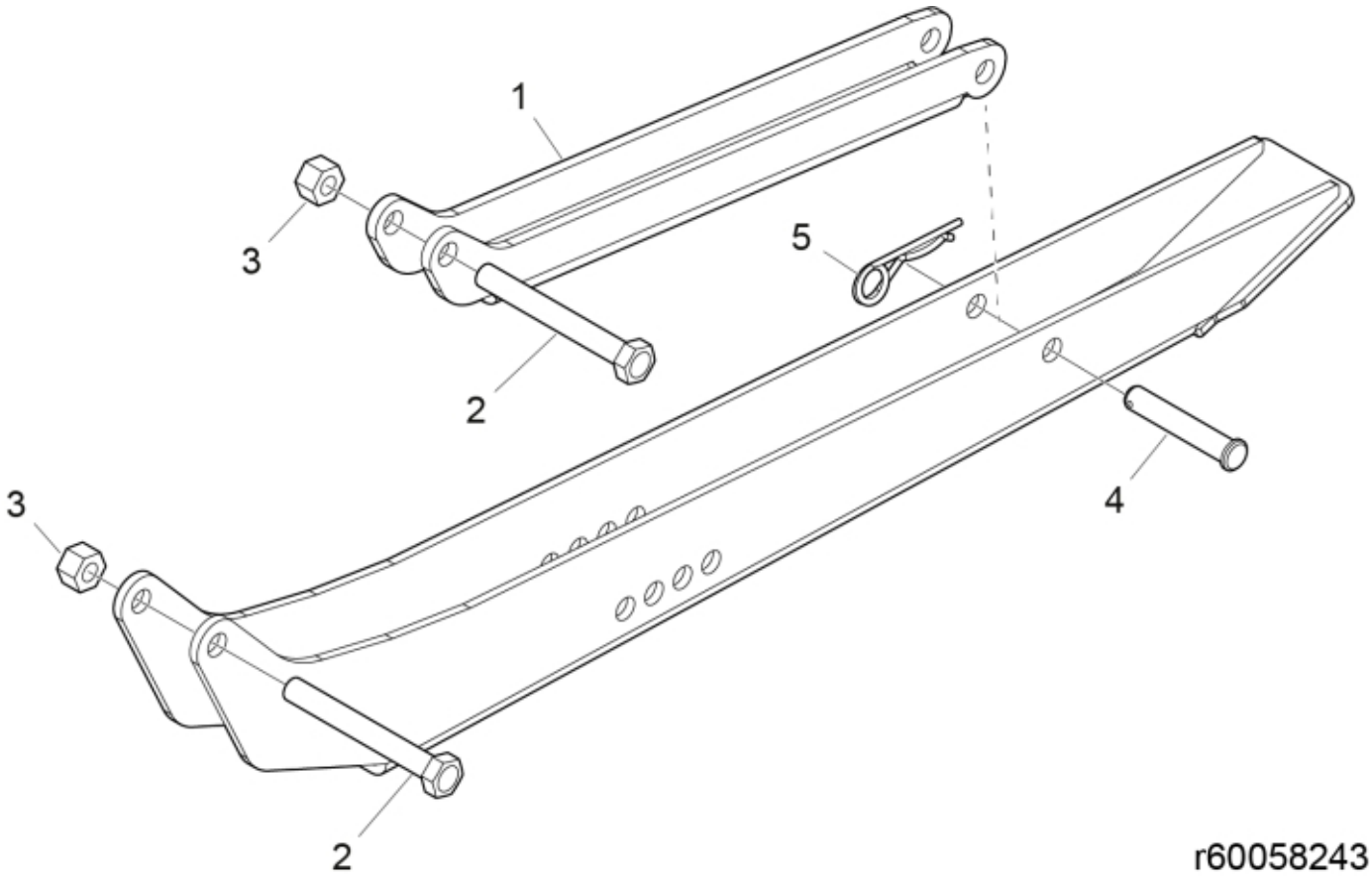

© 2025 Jost

Part assemblies	Support leg
Specification	Specification: Case Red
	Year From: 1/20/2021 12:00:00 AM

PartNo	Pos	Qty	Name	Specifications
60051642-13	1	1	Stay	Case Red
5002114	2	2	Screw	M6S 12x100
5011555	3	2	Nut	M12 Loc
5051984	4	1	Locking Pin	
5221186	5	1	Pin clip	□ 12x120

© 2025 Jost