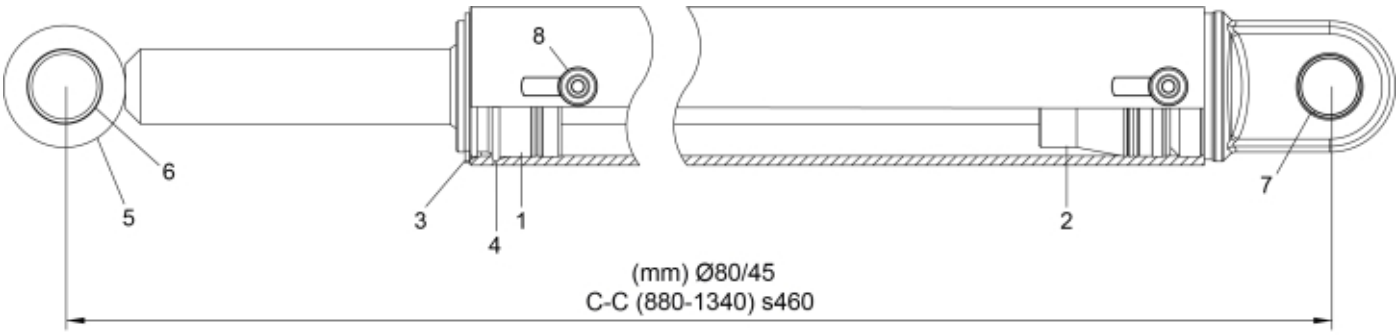

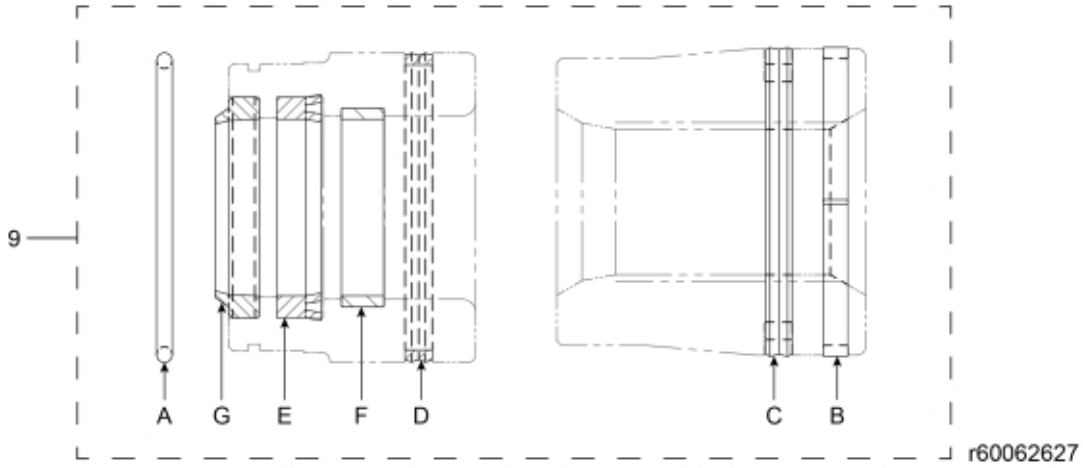

© 2025 Jost

Description	80/45
Part assemblies	Tilt Cylinder

PartNo	Pos	Qty	Name	Specifications
60062699	1	1	Bearing	D80/45
12708012	2	1	Piston	D80
5016620	3	1	Retaining ring	
5016667	4	1	Retaining ring	
60062673	5	1	Piston rod	
5018514	6	2	Bushing	D35 L=20
5018515	7	2	Bushing	D30 L=20
5026637	8	2	Plug	
60065179	9	1	Seal kit	
5037241	A	1	• O-ring	72,62 x 3,53
	B	1	• Guide ring	80/75 x 5,5
5040025	C	1	• Piston seal	80/64,5 x 6,3
5039005	D	1	• Cover seal	80 x 73,6 x 6,4
5051942	E	1	• Seal	45-55-10
5051941	F	1	• Guide ring	Ø50
5051940	G	1	• Wiper	55,1/44 x 10/7

© 2025 Jost