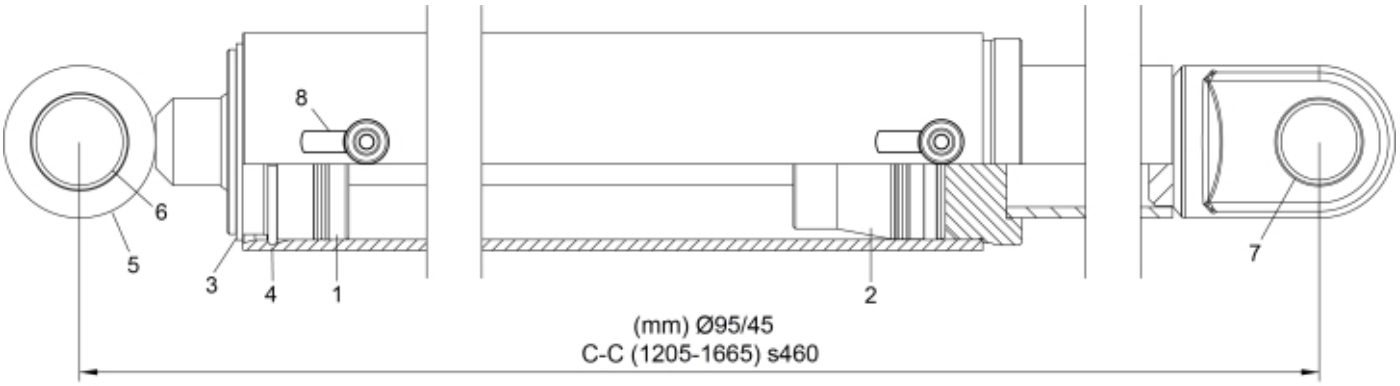

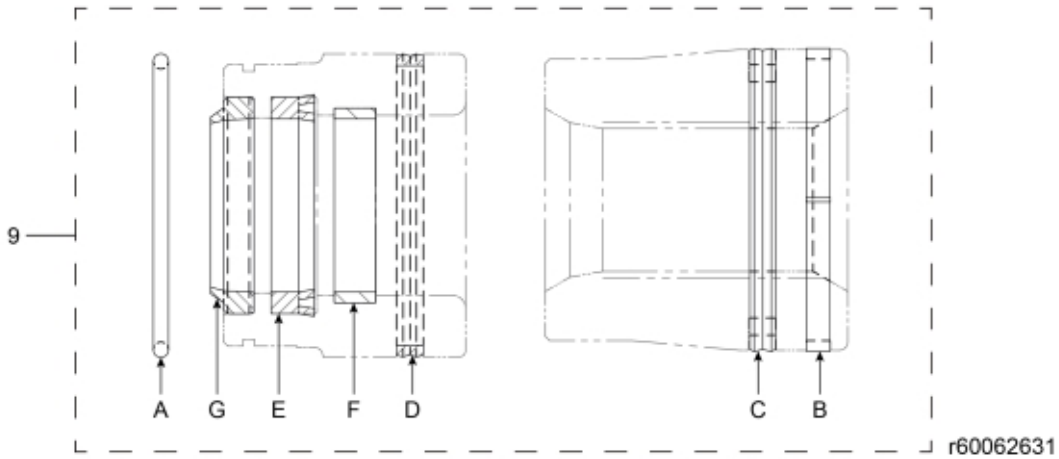

© 2025 Jost

Description	95/45
Part assemblies	Tilt Cylinder

PartNo	Pos	Qty	Name	Specifications
60062641	1	1 PCS	Bearing	
12720112	2	1	Piston	
5040069	3	1	Retaining ring	
5040070	4	1	Retaining ring	
60062654	5	1	Piston rod	
5018513	6	2	Bushing	D40 L=20
5018514	7	2	Bushing	D35 L=20
5026637	8	2	Plug	
60065180	9	1	Seal kit	
5039033	A	1 PCS	• O-ring	78.3x85.3x3.53
5040078	B	1	• Guide ring	95/5.5x2.5
5040079	C	1	• Piston seal	D95
5040068	D	1	• Seal kit	95x88.8x6.9
5051942	E	1	• Seal	45-55-10
5051941	F	1	• Guide ring	Ø50
5051940	G	1	• Wiper	55,1/44 x 10/7

© 2025 Jost