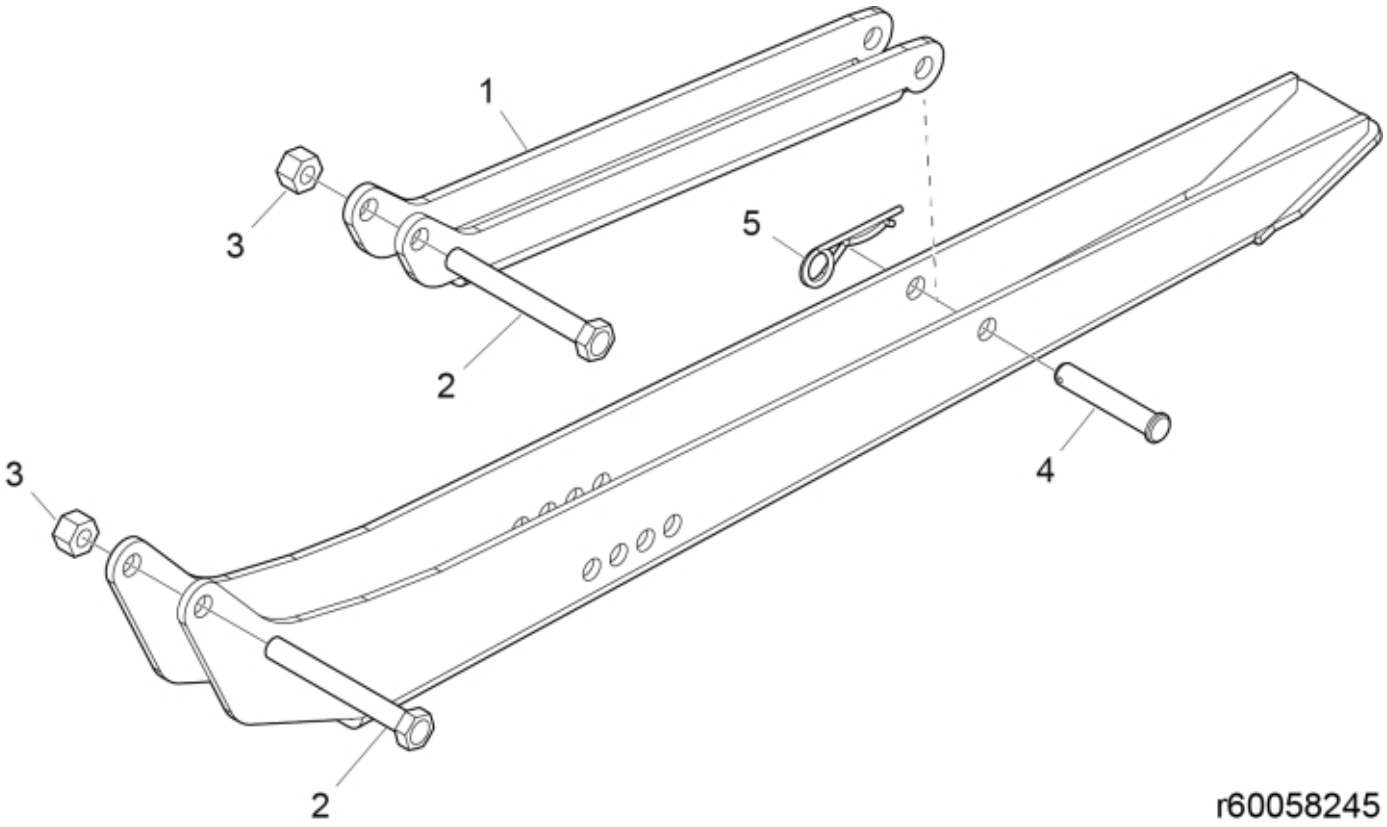



© 2025 Jost

| | |
|---|---|
| **Part assemblies** | Support leg |
| **Specification** | Specification: Kubota Orange |
| | Year From: 1/20/2021 12:00:00 AM |

| PartNo | Pos | Qty | Name | Specifications |
|---|---|---|---|---|
| 60051642-3 | 1 | 1 PCS | Stay | Kubota Orange |
| 5002114 | 2 | 2 | Screw | M6S 12x100 |
| 5011555 | 3 | 2 | Nut | M12 Loc |
| 5051984 | 4 | 1 | Locking Pin | |
| 5221186 | 5 | 1 | Pin clip | □ 12x120 |


© 2025 Jost