

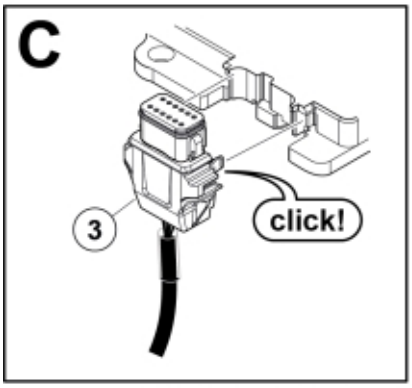

M 59024041_59024061

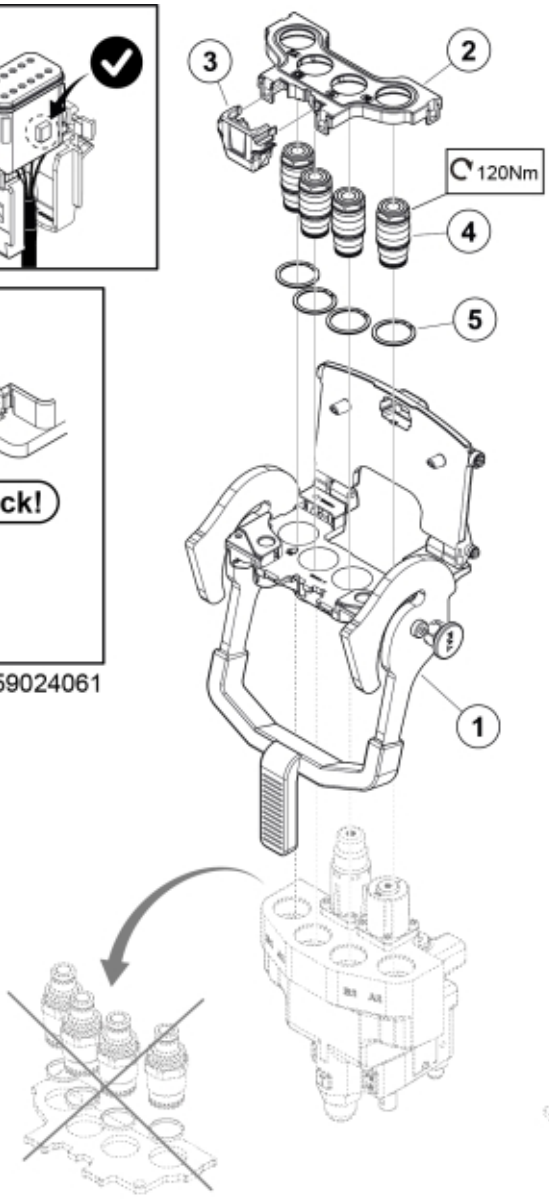

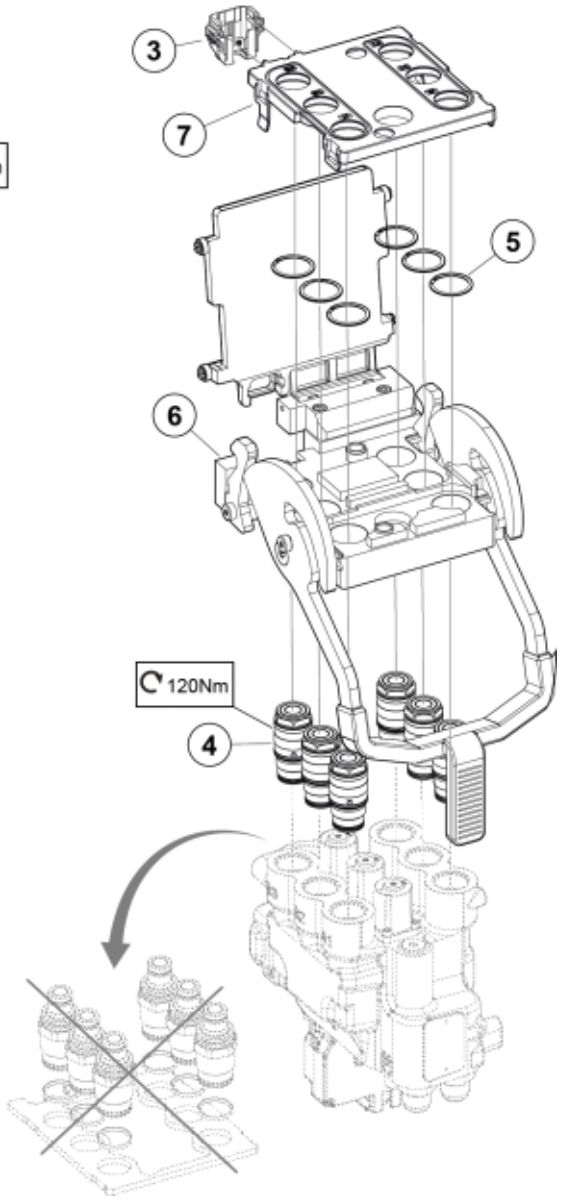

© 2025 Jost

Description	QC4
Part assemblies	Conversion kit QCS

PartNo	Pos	Qty	Name	Specifications
59024041		1	Conversion kit QCS	
59021004	1	1	Multi coupling base, QC4	
59021024	2	1	Cover	
59021025	3	1	Connector Support	
59021041	4	4	Coupling	
59021051	5	4	Circlip	

© 2025 Jost