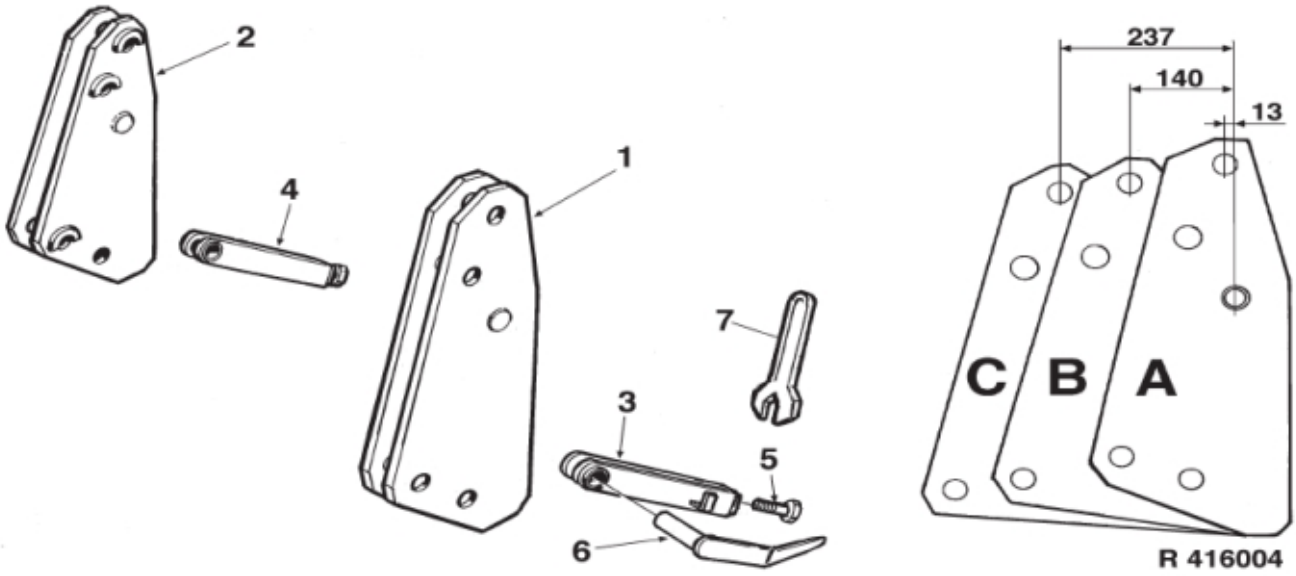
2
4
1
7
3
5
6
237
140
13
C
B
A
R 416004

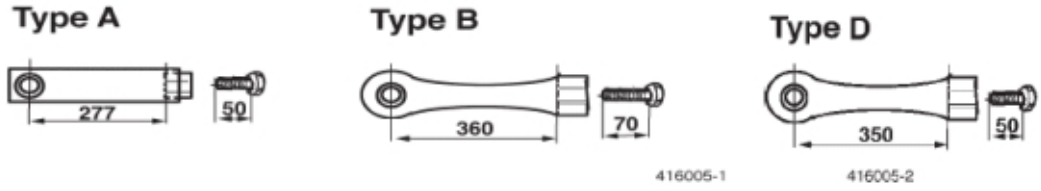
Type A
277
50
Type B
360
70
Type D
350
50
416005-1
416005-2

© 2025 Jost

Description	US
Part assemblies	Bearing box

PartNo	Pos	Qty	Name	Specifications
142882-1	1	1	Bearing box LH	Type A (Standard)
142883-1	2	1	Bearing box RH	Type A (Standard)
263130-1	1	1 PCS	Bearing box LH	Glossy Black, (+ 130 mm) Type B (Option)
263131-1	2	1 PCS	Bearing box RH	Glossy Black, (+ 130 mm) Type B (Option)
263230-1	1	1 PCS	Bearing box LH	Glossy Black, (+230mm) Type C (Option)
263231-1	2	1 PCS	Bearing box RH	Glossy Black, (+ 230 mm) Type C (Option)
258141	3	1 PCS	Retaining fork LH	L=277 mm Type A
258142	4	1 PCS	Retaining fork RH	L=277 mm Type A
5002253	5	1 PCS	• Screw	M6S M24x50 (8.8)
252098	3	1 PCS	Retaining fork LH	L= 360 mm Type B
252099	4	1 PCS	Retaining fork RH	L= 360 mm Type B
5002252	5	1 PCS	• Screw	M6S M24X70 (8.8)
252107	3	1 PCS	Retaining fork LH	L=350mm Type D
252108	4	1 PCS	Retaining fork RH	L=350mm Type D
5002253	5	1 PCS	• Screw	M6S M24x50 (8.8)
1116525	6	2 PCS	Pin	
5047001	7	1 PCS	U-wrench	

© 2025 Jost