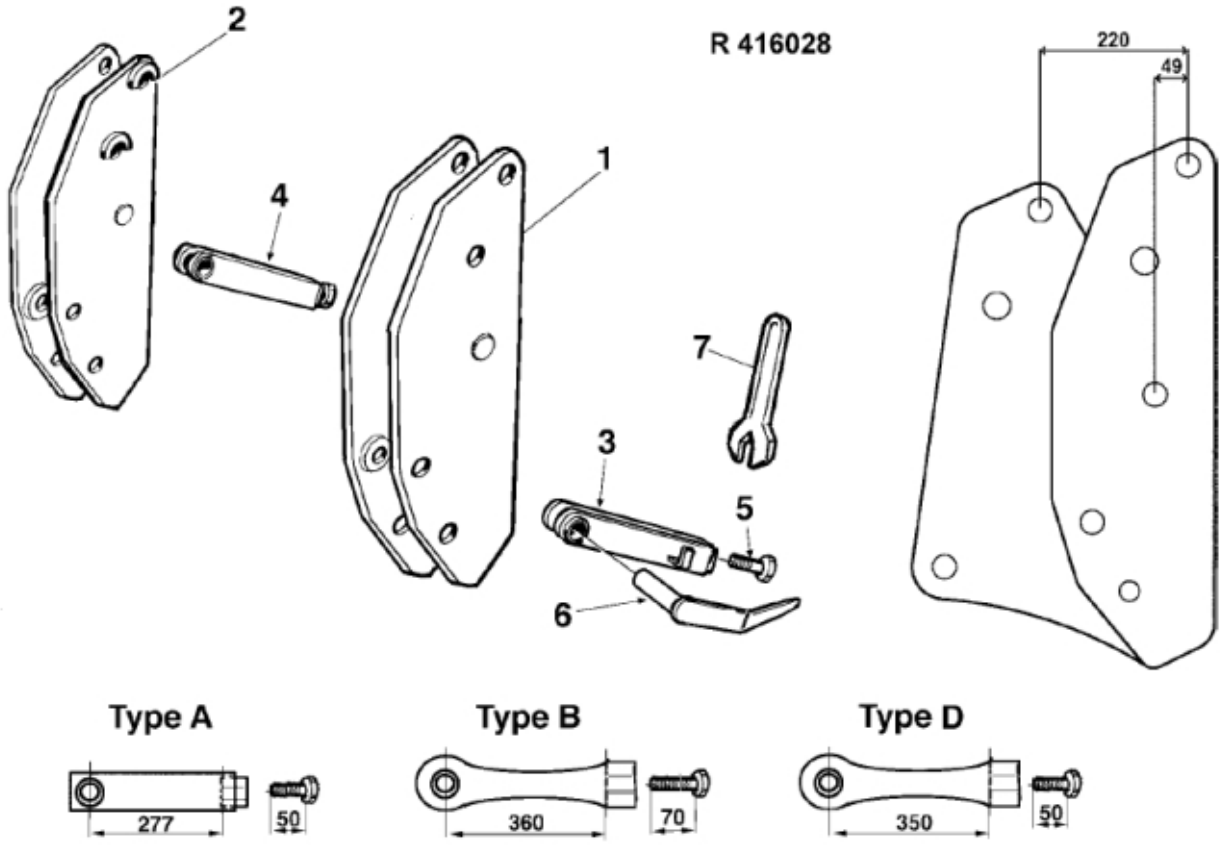

© 2025 Jost

Description	UM
Part assemblies	Bearing box

PartNo	Pos	Qty	Name	Specifications
298393-1	1	1 PCS	Bearing box LH	Type A (Standard 980, After Sale 985)
298394-1	2	1	Bearing box RH	Type A (Standard 980, After Sale 985)
5201072-1	1	1 PCS	Bearing box LH	Glossy Black, (+230mm) Type C (Standard 985, After Sale 980)
5201073-1	2	1 PCS	Bearing box RH	Glossy Black, (+230mm) Type C (Standard 985, After Sale 980)
258141	3	1 PCS	Retaining fork LH	L=277 mm Type A
258142	4	1 PCS	Retaining fork RH	L=277 mm Type A
5002253	5	1 PCS	• Screw	M6S M24x50 (8.8)
252098	3	1 PCS	Retaining fork LH	L= 360 mm Type B
252099	4	1 PCS	Retaining fork RH	L= 360 mm Type B
5002252	5	1 PCS	• Screw	M6S M24X70 (8.8)
252107	3	1 PCS	Retaining fork LH	L=350mm Type D
252108	4	1 PCS	Retaining fork RH	L=350mm Type D
5002253	5	1 PCS	• Screw	M6S M24x50 (8.8)
1116670	6	2 PCS	Latch Bolt	
5047001	7	1 PCS	U-wrench	

© 2025 Jost