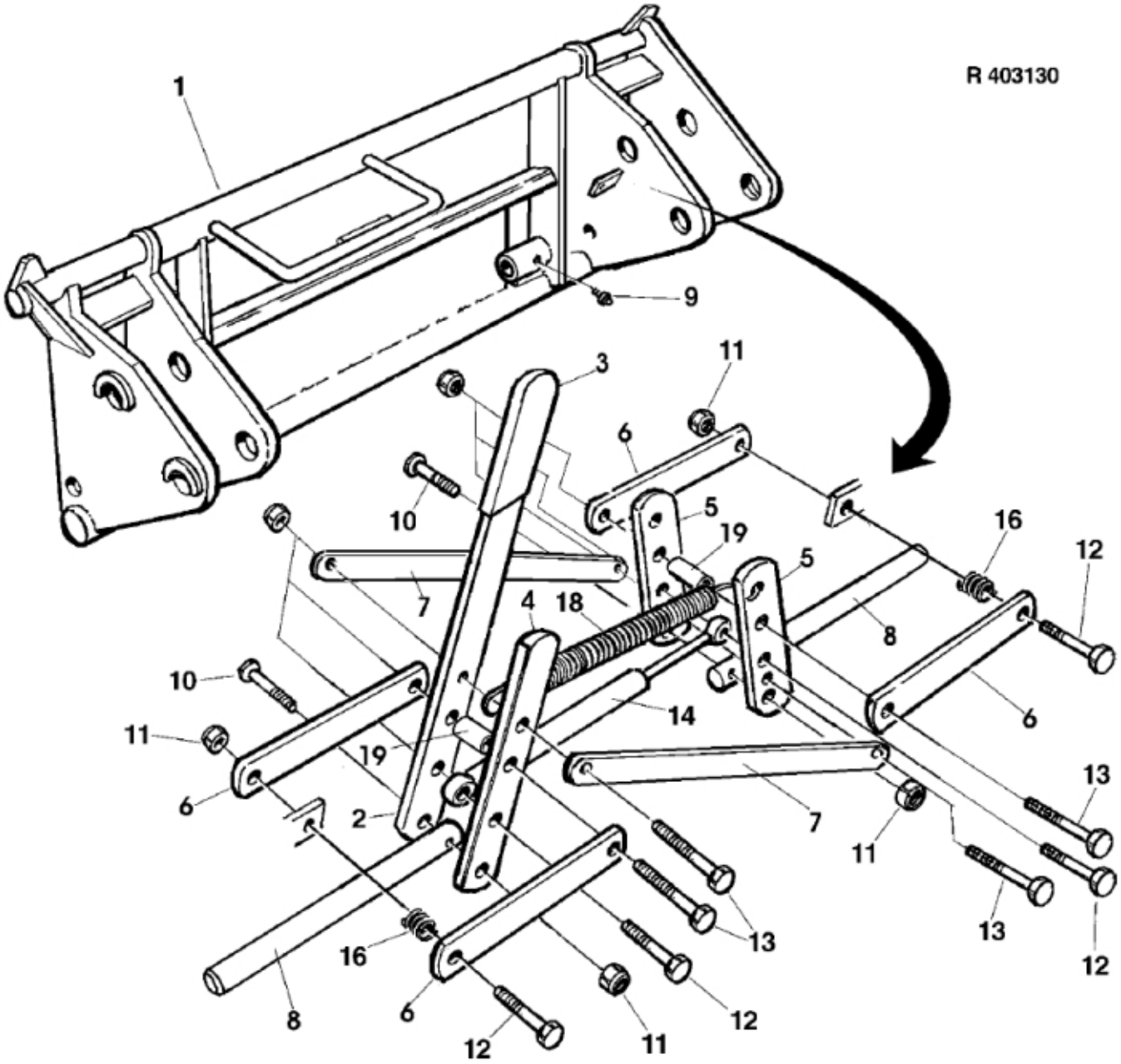
R 403130
1
9
3
11
6
10
5
19
16
12
5
7
4
18
8
10
14
6
11
19
13
6
2
7
11
13
16
13
8
6
12
12
11

© 2025 Jost

Description	(Combi) Euro/SMS (8+5)
Part assemblies	Tool carrier
Specification	Year To: 12/31/2001 12:00:00 AM

PartNo	Pos	Qty	Name	Specifications
246732	1	1 PCS	Frame	
246705	2	1	Locking Handle	
5022144	3	1	Cover	
246704	4	1 PCS	Stay	
246703	5	2 PCS	Stay	
246723	6	4 PCS	Stay	
246707	7	2 PCS	Stay	
246716	8	2 PCS	Latch Bolt	Ø 20 x 242
5023005	9	2	Greaser	M 10 x 1
233129	10	2 PCS	Screw	
5011554	11	10	Nut	Loc-King M10
5002080	12	4	Screw	M6S 10 x 60
5002083	13	4 PCS	Screw	M6S M10X75
5020627	14	1 PCS	Gas spring	200N
1101017	16	2 PCS	Spring	
1101035	18	1	Spring	
246735	19	2 PCS	Spacer Sleeve	

© 2025 Jost