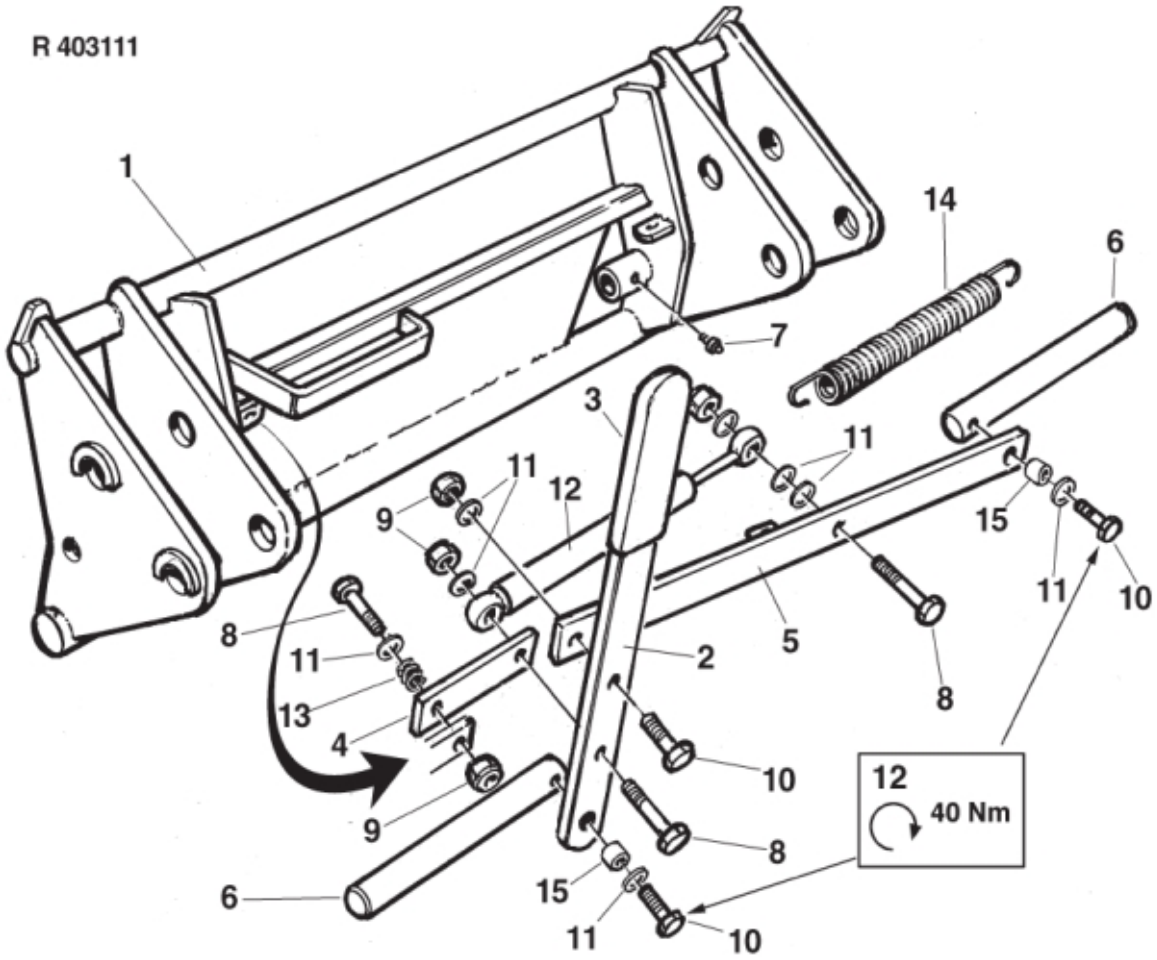
R 403111
1
14
6
7
3
11
11
12
9
15
11
10
8
11
5
2
8
13
4
10
12
40 Nm
9
8
6
15
11
10

© 2025 Jost

Description	Euro (8)
Part assemblies	Tool carrier

PartNo	Pos	Qty	Name	Specifications
246752	1	1 PCS	Frame	
246659	2	1	Locking Handle	
5022144	3	1	Cover	
246658	4	1 PCS	Stay	
246759	5	1 PCS	Stay	
1116673	6	2 PCS	Latch Bolt	Ø 20 x 207
5023005	7	2	Greaser	M 10 x 1
5002079	8	3	Screw	M6S 10x50
5013110	9	4	Washer	BRB 10.5x22x2
5002077	10	3	Screw	M6S 10x30
5013110	11	1	Washer	BRB 10.5x22x2
5020628	12	1 PCS	Gas spring	
1101034	13	1 PCS	Spring	
1101035	14	1	Spring	
246662	15	2 PCS	Spacer Sleeve	

© 2025 Jost