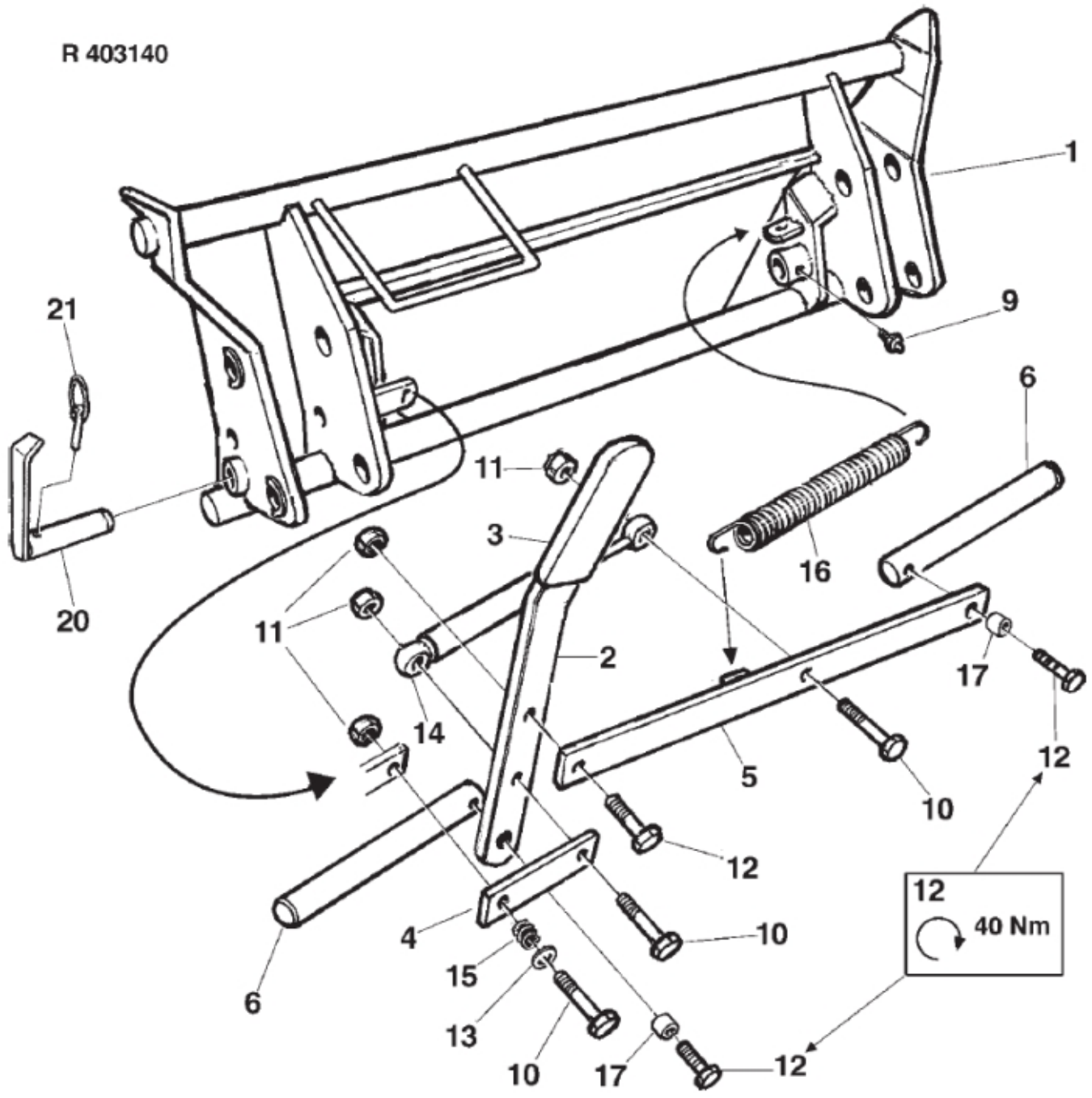
R 403140
1
21
9
6
11
3
16
20
11
2
17
14
5
12
10
12
12
40 Nm
4
10
15
6
13
10
17
12

© 2025 Jost

Description	COMBI EURO / FAUCHEUX (8+ 14)
Part assemblies	Tool carrier

PartNo	Pos	Qty	Name	Specifications
246762	1	1 PCS	Frame	
246743	2	1	Locking Handle	
5022144	3	1	Cover	
246658	4	1 PCS	Stay	
246759	5	1 PCS	Stay	
1116673	8	2 PCS	Latch Bolt	Ø 20 x 207
5023005	9	2	Greaser	M 10 x 1
5002079	10	3	Screw	M6S 10x50
5013110	11	4	Washer	BRB 10.5x22x2
5002077	12	3	Screw	M6S 10x30
5013110	13	1	Washer	BRB 10.5x22x2
5020628	14	1 PCS	Gas spring	
1101034	15	1 PCS	Spring	
1101035	16	1	Spring	
246662	17	2 PCS	Spacer Sleeve	
1116674	20	2 PCS	Latch Bolt	
1102001	21	2	Linch pin	

© 2025 Jost