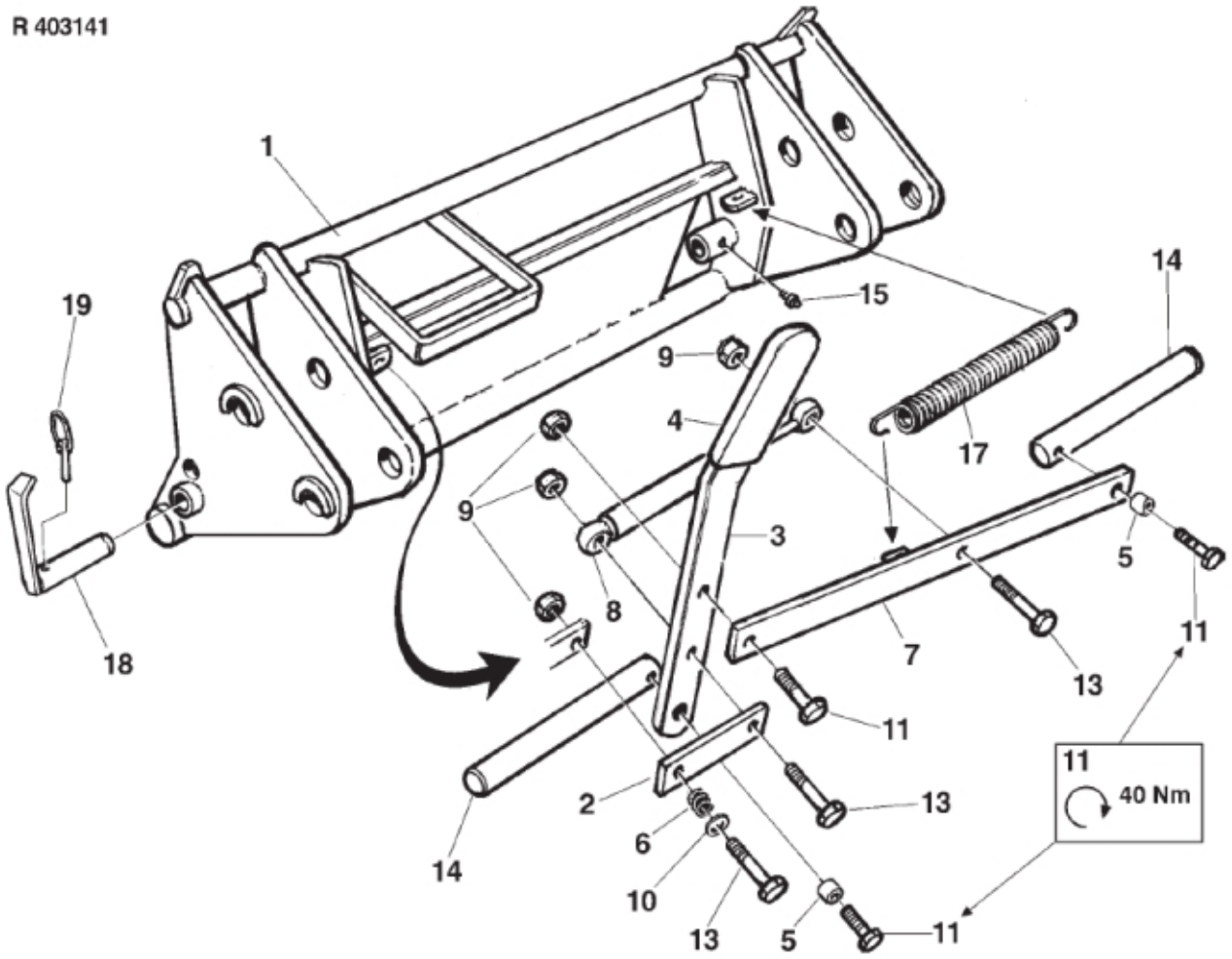
R 403141
1
19
15
14
9
4
17
9
3
5
8
11
18
7
13
11
11
40 Nm
2
13
6
14
10
13
5
11

© 2025 Jost

Description	COMBI EURO / FAUCHEUX (8+ 14)
Part assemblies	Tool carrier

PartNo	Pos	Qty	Name	Specifications
246782	1	1 PCS	Frame	
246658	2	1 PCS	Stay	
246670	3	1	Locking Handle	
5022144	4	1	Cover	
246662	5	2 PCS	Spacer Sleeve	
1101034	6	1 PCS	Spring	
246759	7	2 PCS	Stay	
5020628	8	1 PCS	Gas spring	
5013110	9	4	Washer	BRB 10.5x22x2
5013110	10	1	Washer	BRB 10.5x22x2
5002077	11	3	Screw	M6S 10x30
5002079	13	3	Screw	M6S 10x50
1116673	14	2 PCS	Latch Bolt	Ø 20 x 207
5023005	15	2	Greaser	M 10 x 1
1101035	17	1	Spring	
1116677	18	2 PCS	Latch Bolt	
1102001	19	2	Linch pin	

© 2025 Jost