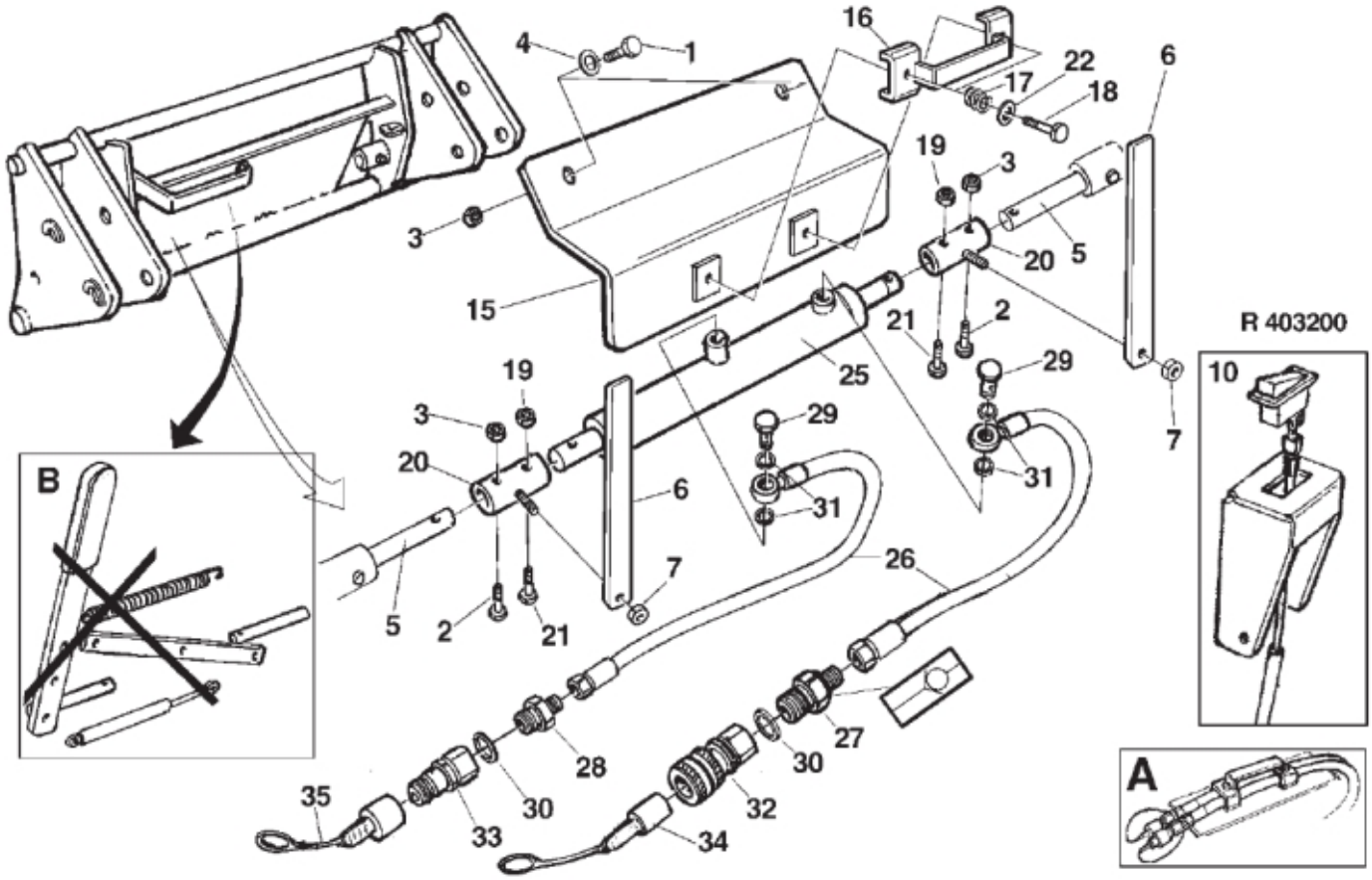
R 403200
A
B
10
1
2
3
4
5
6
7
15
16
17
18
19
20
21
22
25
26
27
28
29
30
31
32
33
34
35

© 2025 Jost

Part assemblies Hydr. Implement Locking

PartNo	Pos	Qty	Name	Specifications
5002077	1	2	Screw	M6S 10x30
5002078	2	2	Screw	M6S 10x40 (8.8)
5011054	3	2	Nut	M6M M10
5013110	4	4	Washer	BRB 10.5x22x2
246744	5	2 PCS	Latch Bolt	
246786	6	2 PCS	Rod	
5013110	7	2	Washer	BRB 10.5x22x2
246769	10	1 PCS	Bracket	
5024380		1 PCS	• Switch	
5024202		1 M	• Harness	
245195		1	Locking cylinder with hose	
246785	15	1 PCS	• Cover plate	
145114	16	1 PCS	• Hose clamp	
1101019	17	2 PCS	• Spring	
5002056	18	2	• Screw	M6S 8 x 50
5013110	19	2	• Washer	BRB 10.5x22x2
246745	20	2 PCS	• Sleeve	
5002055	21	2	• Screw	M6S M8x40
5013110	22	2	• Washer	BRB 10.5x22x2
798010	25	1	• Locking Ram	
1103427	26	2 PCS	• Hydraulic hose	1/4" x 650 x Sp
511230	27	1 PCS	• Check valve	1/2" - 1/4"
1120110	28	1 PCS	• Adaptor	R 1/2" - R 1/4"
1120166	29	2	• Banjo fitting	R1/4"
5013853	30	2	• Dowty washer	Tredo 1/2", Part is included in kit 60007907 Hose cpl., 9032177 Hose cpl.
5013856	31	4	• Dowty washer	Tredo 1/4"
5044127	32	1	• Quick Coupling	1/2", Part is included in kit 60007907 Hose cpl., 9032177 Hose cpl.
5044128	33	1	• Quick Coupling	ISO-A Plug 1/2"
5044129	34	1	• Dust Cover	1/2" Male
5044130	35	1	• Dust Cover	Part is included in kit 60007907 Hose cpl., 9032177 Hose cpl.

© 2025 Jost