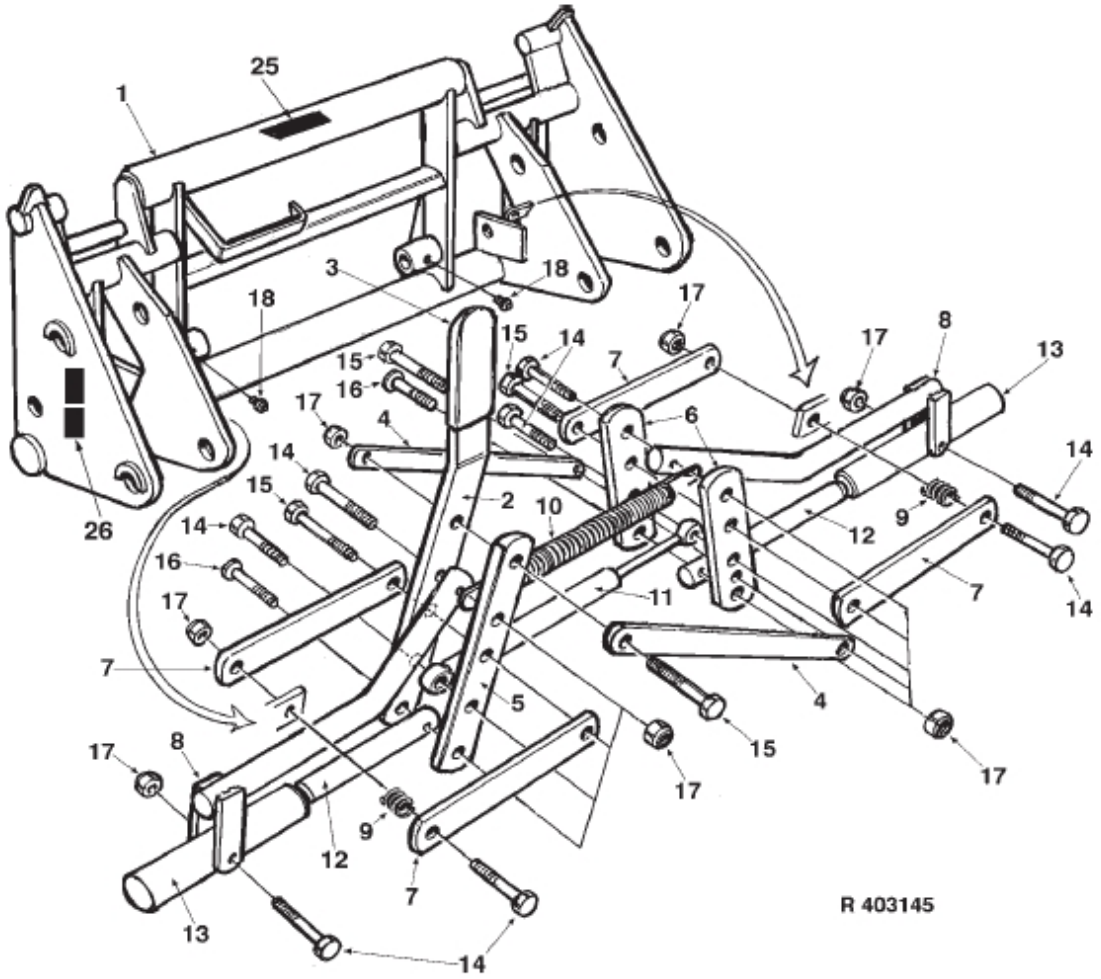
1
25
3
18
18
17
15
14
7
17
8
13
15
16
17
4
6
14
14
15
2
10
12
9
14
14
16
11
7
14
17
7
5
4
15
17
17
8
17
9
12
7
13
14
R 403145

© 2025 Jost

Description	Euro-Combi (3+5+8)
Part assemblies	Tool carrier

PartNo	Pos	Qty	Name	Specifications
246610	1	1 PCS	Frame	
246678	2	1 PCS	Control lever	
5022144	3	1	Cover	
246679	4	2	Parallel rod	
246680	5	1 PCS	Link	
246681	6	2 PCS	Link	
246682	7	4 PCS	Stay	
246683	8	2 PCS	Stay	
1101017	9	2 PCS	Spring	
1101035	10	1	Spring	
5020627	11	1 PCS	Gas spring	200N
1116668	12	2	Locking Pin	Ø 20
1116669	13	2	Locking Pin	Ø 28
5002080	14	8	Screw	M6S 10 x 60
5002083	15	4 PCS	Screw	M6S M10X75
233129	16	2 PCS	Screw	
5011554	17	14	Nut	Loc-King M10
5023005	18	4	Greaser	M 10 x 1
1123390	25	1 PCS	Decal	
1123673	26	2	Warning decal	

© 2025 Jost