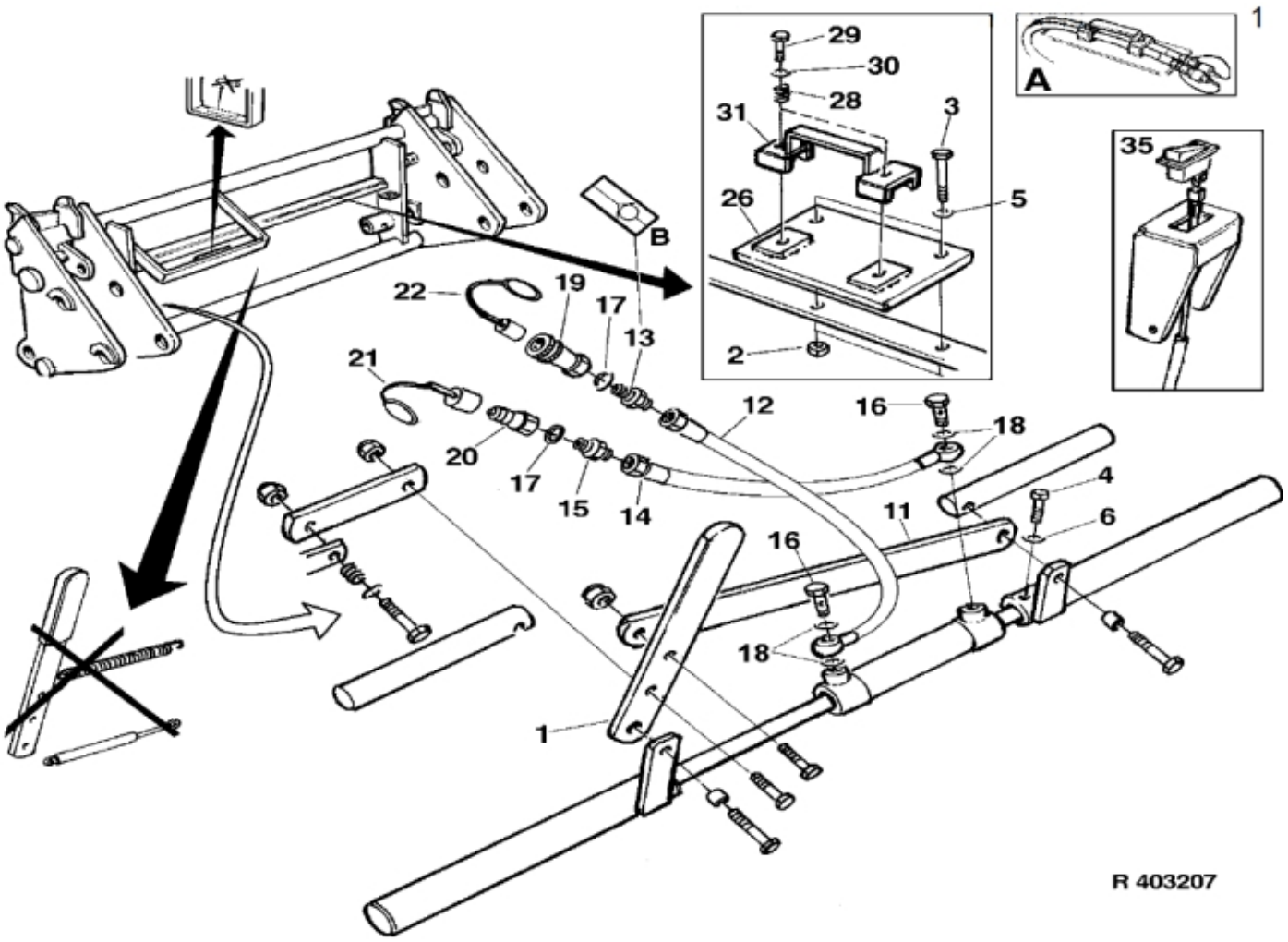
1
A
29
30
28
31
3
26
5
2
35
B
22
19
17
13
21
12
16
18
20
17
15
14
4
11
6
16
18
1
R 403207

© 2025 Jost

Part assemblies Hydr. Implement Locking

PartNo	Pos	Qty	Name	Specifications
269677	1	1 PCS	Link	(245230, 269660)
5201138		1 PCS	Link	(5201143, 5201122)
5013110	2	2	Washer	BRB 10.5x22x2
5002052	3	2	Screw	M6S M8x25
5002078	4	2	Screw	M6S 10x40 (8.8)
5013110	5	2	Washer	BRB 10.5x22x2
5013110	6	2	Washer	BRB 10.5x22x2
245196		1	Locking cylinder with hose	
702010	11	1	• Locking Ram	
1103145	12	1 PCS	• Hydraulic hose	1/4" x 800 x Sp
511230	13	1 PCS	• Check valve	1/2" - 1/4"
1103146	14	1 PCS	• Hydraulic hose	1/4"
1120110	15	1 PCS	• Adaptor	R 1/2" - R 1/4"
1120166	16	2	• Banjo fitting	R1/4"
5013853	17	2	• Dowty washer	Tredo 1/2", Part is included in kit 60007907 Hose cpl., 9032177 Hose cpl.
5013856	18	4	• Dowty washer	Tredo 1/4"
5044127	19	1	• Quick Coupling	1/2", Part is included in kit 60007907 Hose cpl., 9032177 Hose cpl.
5044128	20	1	• Quick Coupling	ISO-A Plug 1/2"
5044129	21	1	• Dust Cover	1/2" Male
5044130	22	1	• Dust Cover	Part is included in kit 60007907 Hose cpl., 9032177 Hose cpl.
267649		1 PCS	Bracket complete	
246785	26	1 PCS	• Cover plate	
1101019	28	2 PCS	• Spring	
5002056	29	2	• Screw	M6S 8 x 50
5013110	30	2	• Washer	BRB 10.5x22x2
145114	31	1 PCS	• Hose clamp	
246769	35	1 PCS	Bracket	
5024380		1 PCS	• Switch	
5024202		1 M	• Harness	

© 2025 Jost