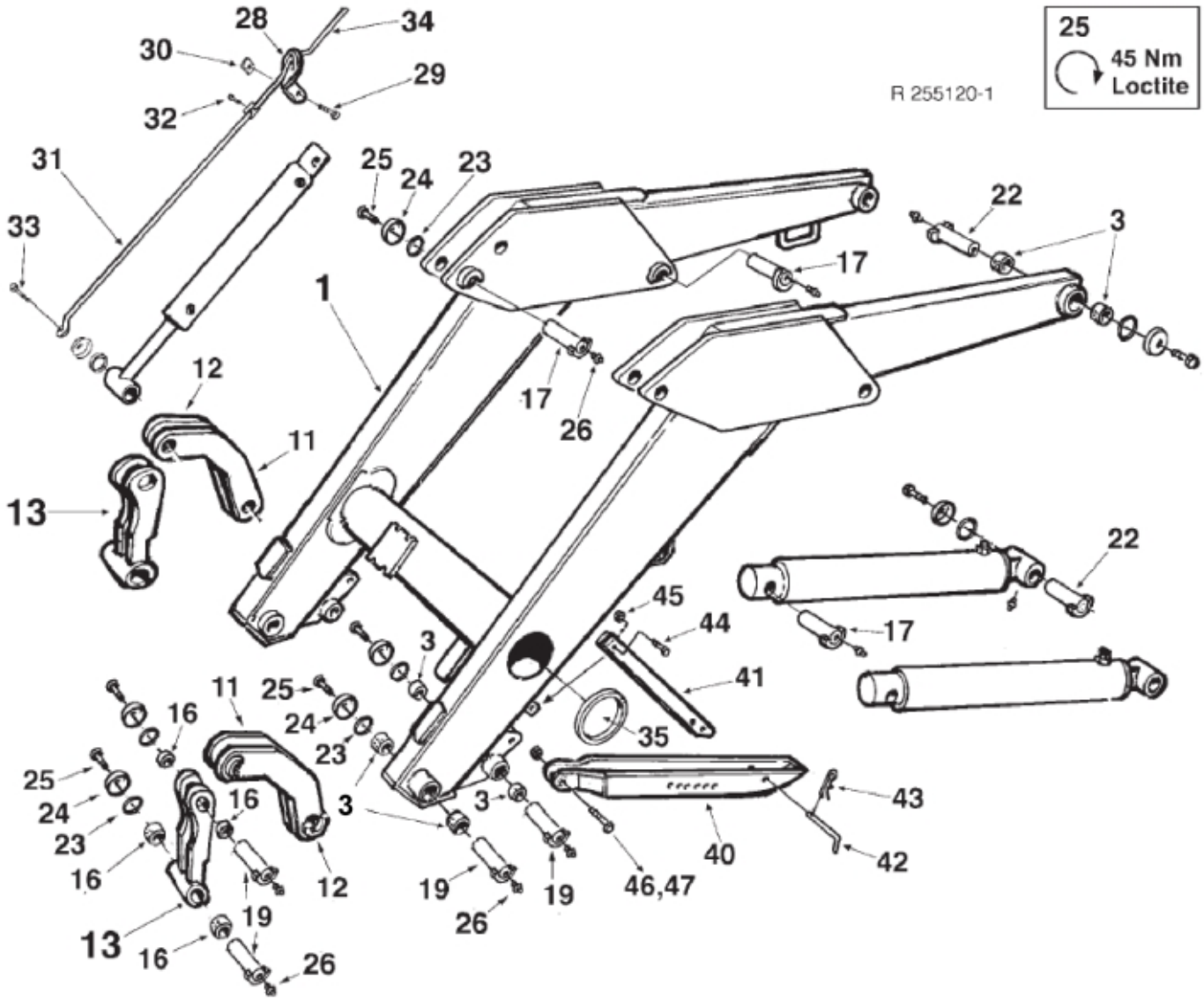
25
45 Nm
Loctite
R 255120-1
28
34
30
29
32
31
33
25
24
23
22
3
17
1
12
11
13
17
26
22
45
44
17
3
41
11
25
16
24
23
35
25
24
23
16
3
3
43
16
12
19
19
46,47
40
42
13
19
26
16
26

© 2025 Jost

Description	Q 720
Part assemblies	Loader beam

PartNo	Pos	Qty	Name	Specifications
272091-1	1	1	Loader beam	Glossy Black
5018515	3	12	• Bushing	D30 L=20
142888-1	11	2	Link	Glossy Black
142889-1	12	2	Link	Glossy Black, (outer)
142892-1	13	2	Link	Glossy Black
5018515	16	4	• Bushing	D30 L=20
1116923	17	4	Pivot Pin	Ø 30 x 84
1116946	19	8	Pivot Pin	Ø 30 x 121
1116930	22	4	Pivot Pin	Ø 30 x 96
5022089	23	16	Rubber ring	
142893	24	16	Locking cover	
5002076	25	16	Screw	M6S M10 x 20 (8.8)
5023005	26	16	Greaser	M 10 x 1
245145	28	1	Level Indicator	
5002052	29	1	Screw	M6S M8x25
144159	30	1	Plate	
142895	31	1	Level Indicator,- outer	
5002033	32	1	• Screw	M6S M6x12 (8.8)
5002060	33	1	• Screw	M6S M8x12 (8,8)
142896	34	1	Level Indicator,- inner	
5022111	35	2 PCS	Cover	
293135	40	2	Support leg	
293136	41	2	Stay	
267632	42	2	Locking Pin	
5016051	43	2	Spring	
5002105	44	2	Screw	M6S M12x45
5011555	45	2	Nut	M12 Loc
5002155	46	2	Screw	M6S 16 x 60 (8.8)
5011569	47	2	Nut	
5046008		1	Paint	Black

© 2025 Jost