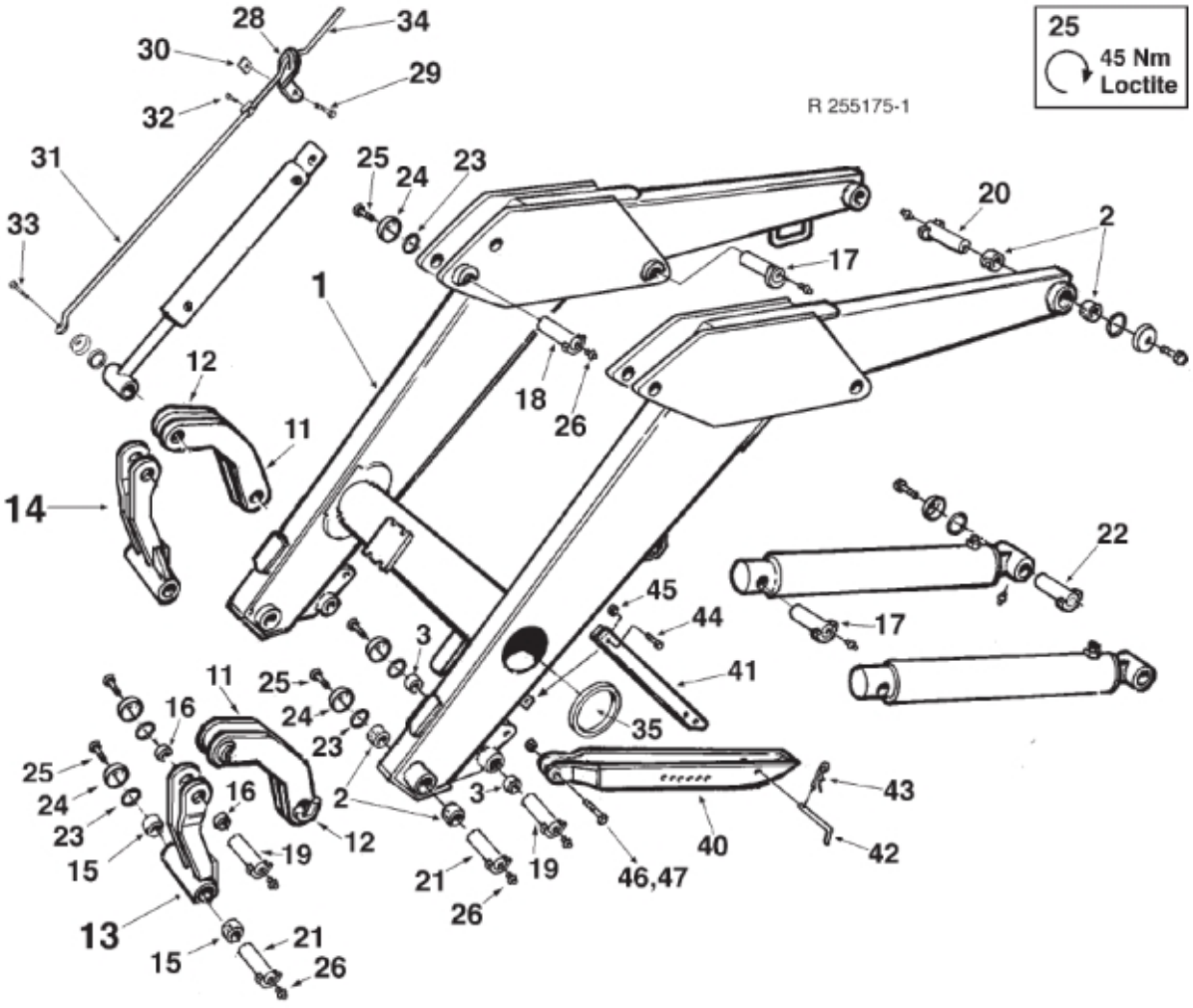
25
45 Nm
Loctite
R 255175-1
28
34
30
29
32
31
33
25
24
23
20
2
17
1
12
18
26
11
14
22
45
44
17
3
41
11
25
16
24
23
35
25
24
23
16
2
3
43
15
19
12
21
19
46,47
40
42
13
26
15
21
26

© 2025 Jost

Description	Q 755
Part assemblies	Loader beam

PartNo	Pos	Qty	Name	Specifications
275591-1	1	1	Loader beam	Glossy Black
5018514	2	8	• Bushing	D35 L=20
5018515	3	4	• Bushing	D30 L=20
246604-1	11	2	Link	
246603-1	12	2	Link	(outer)
267598-1	13	1	Link	Glossy Black
267597-1	14	1	Link	Glossy Black
5018514	15	2	• Bushing	D35 L=20
5018515	16	2	• Bushing	D30 L=20
1116930	17	2	Pivot Pin	Ø 30 x 96
1116930	18	2	Pivot Pin	Ø 30 x 96
1116946	19	4	Pivot Pin	Ø 30 x 121
1116935	20	2 PCS	Pivot Pin	Ø 35 x 131
1116934	21	4 PCS	Pivot Pin	Ø 35 x 167
1116932	22	2 PCS	Pivot Pin	Ø 30 x 119
5022089	23	16	Rubber ring	
142893	24	16	Locking cover	
5002076	25	16	Screw	M6S M10 x 20 (8.8)
5023005	26	16	Greaser	M 10 x 1
245145	28	1	Level Indicator	
5002052	29	1	Screw	M6S M8x25
144159	30	1	Plate	
142895	31	1	Level Indicator,- outer	
5002033	32	1	• Screw	M6S M6x12 (8.8)
5002060	33	1	• Screw	M6S M8x12 (8,8)
142896	34	1	Level Indicator,- inner	
5022125	35	2 PCS	Cover	
246605	40	2 PCS	Support leg	
246606-1	41	2 PCS	Stay	
267632	42	2	Locking Pin	
5016051	43	2	Spring	
5002105	44	2	Screw	M6S M12x45
5011555	45	2	Nut	M12 Loc
5002155	46	2	Screw	M6S 16 x 60 (8.8)
5011569	47	2	Nut	
5046008		1	Paint	Black

© 2025 Jost