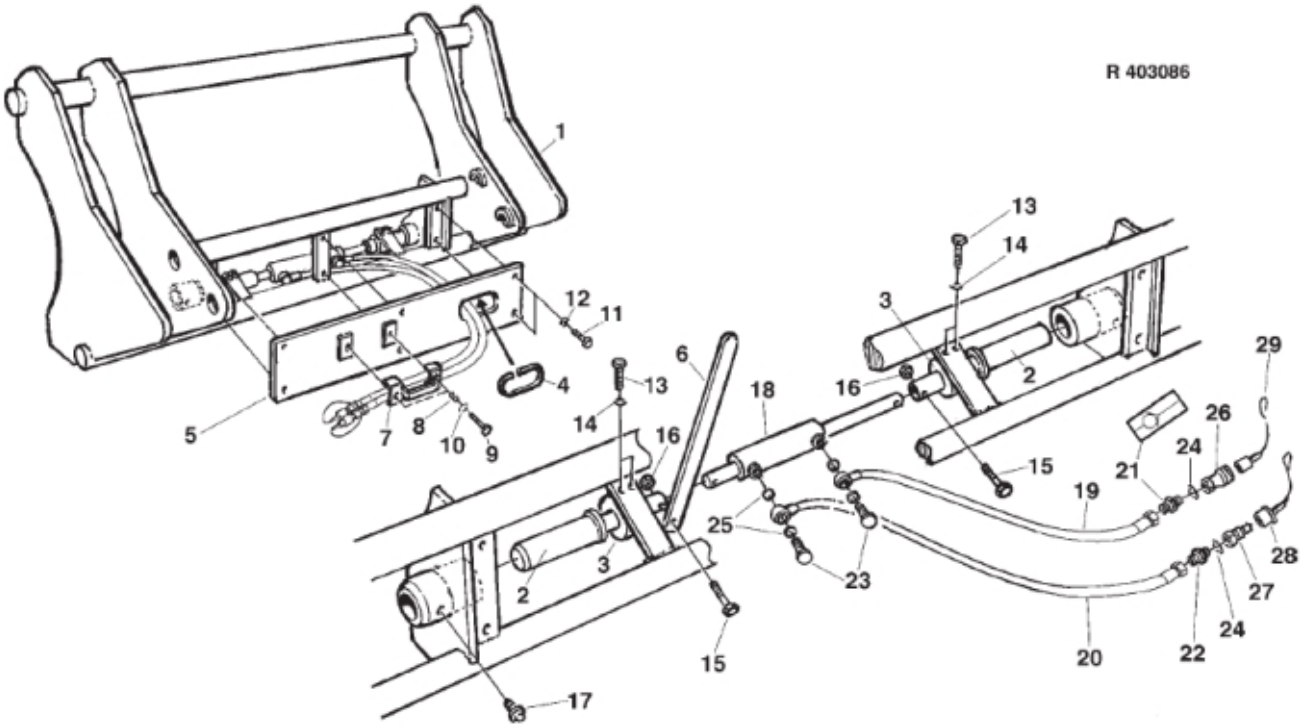
R 403086
1
2
3
4
5
6
7
8
9
10
11
12
13
14
15
16
17
18
19
20
21
22
23
24
25
26
27
28
29

© 2025 Jost

Description	Big BM
Part assemblies	Hydr. Implement Locking

PartNo	Pos	Qty	Name	Specifications
279691	1	1 PCS	Frame	LH
1116688	2	2	Locking Pin	□ 50
1109597	3	2 PCS	Guide sleeve	
5022051	4	1 M	Rubber moulding	
279698	5	1 PCS	Cover plate	
279701	6	1 PCS	Indicator (lever)	
145114	7	1 PCS	Hose clamp	
1101019	8	2 PCS	Spring	
5002056	9	2	Screw	M6S 8 x 50
5011554	10	2	Nut	Loc-King M10
5002051	11	6	Screw	M6S 8 x 20
5011554	12	6	Nut	Loc-King M10
5002077	13	4	Screw	M6S 10x30
5013102	14	4	Washer	BRB 10 x 18 x 2
5002079	15	2	Screw	M6S 10x50
5011554	16	2	Nut	Loc-King M10
5023005	17	2	Greaser	M 10 x 1
702010	18	1	Locking Ram	
1103145	19	1 PCS	Hydraulic hose	1/4" x 800 x Sp
1103146	20	1 PCS	Hydraulic hose	1/4"
511230	21	1 PCS	Check valve	1/2" - 1/4"
1120110	22	1 PCS	Adaptor	R 1/2" - R 1/4"
1120166	23	2	Banjo fitting	R1/4"
5013604	24	2	Washer	Copper 21x28x2
5013613	25	4 PCS	Washer	Ø 13,3/18,9 x 1,5 Cu
5044127	26	1	Quick Coupling	1/2", Part is included in kit 60007907 Hose cpl., 9032177 Hose cpl.
5044128	27	1	Quick Coupling	ISO-A Plug 1/2"
5044129	28	1	Dust Cover	1/2" Male
5044130	29	1	Dust Cover	Part is included in kit 60007907 Hose cpl., 9032177 Hose cpl.

© 2025 Jost