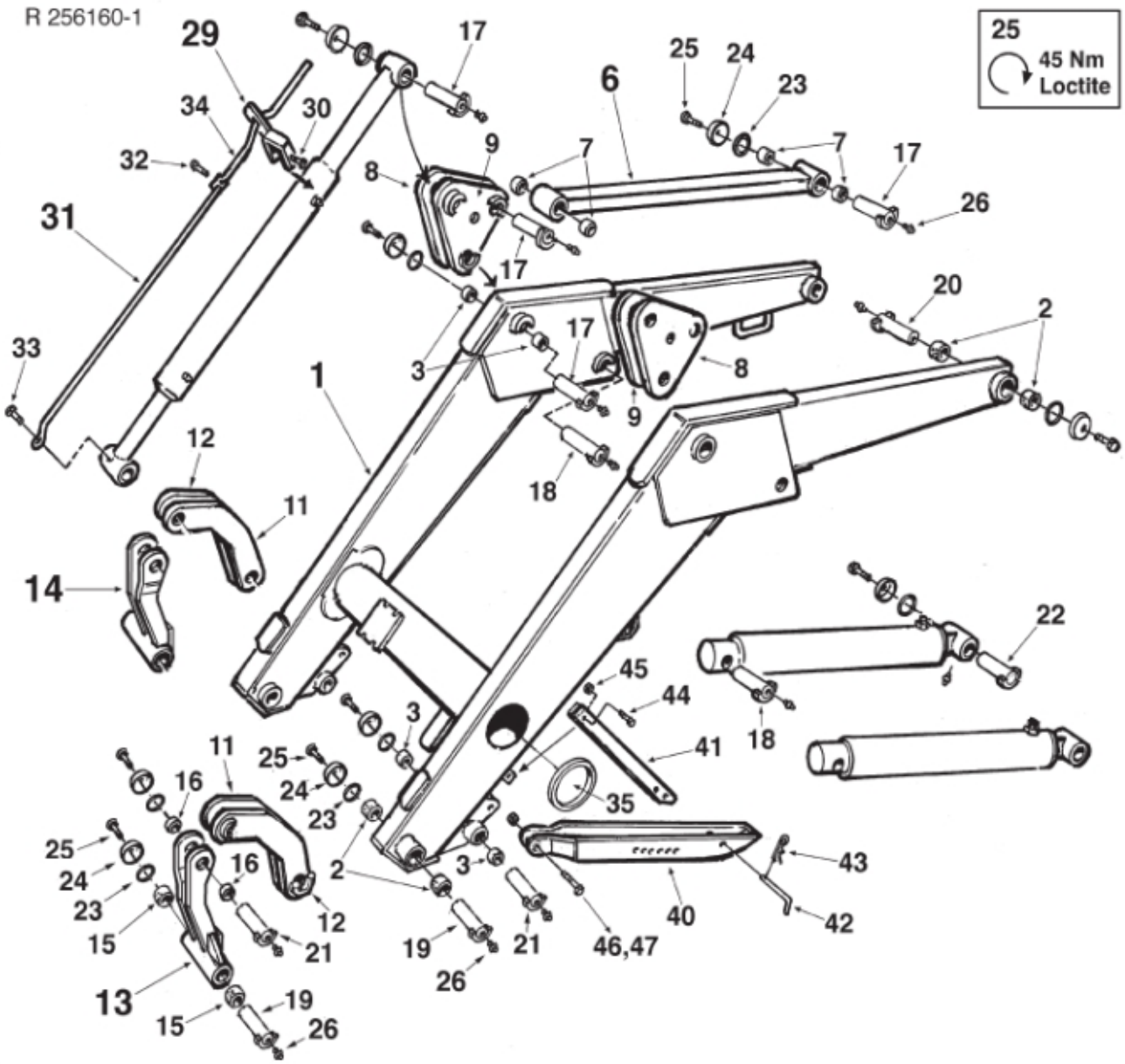

© 2025 Jost

Description	Q 960 US
Part assemblies	Loader beam

PartNo	Pos	Qty	Name	Specifications
296091-1	1	1	Loader beam	
5018514	2	8	• Bushing	D35 L=20
5018515	3	8	• Bushing	D30 L=20
296096-1	6	2	Tie rod	
5018515	7	4	• Bushing	D30 L=20
267604-1	8	2	Knee link	(outer)
267603-1	9	2	Knee link	
246604-1	11	2	Link	
246603-1	12	2	Link	(outer)
267597-1	13	1	Link	Glossy Black
267598-1	14	1	Link	Glossy Black
5018514	15	2	• Bushing	D35 L=20
5018515	16	2	• Bushing	D30 L=20
1116928	17	8 PCS	Pivot Pin	Ø 30 x 131
1116930	18	2	Pivot Pin	Ø 30 x 96
1116934	19	4 PCS	Pivot Pin	Ø 35 x 167
1116935	20	2 PCS	Pivot Pin	Ø 35 x 131
1116946	21	4	Pivot Pin	Ø 30 x 121
1116929	22	2 PCS	Pivot Pin	Ø 30 x 131
5022089	23	22	Rubber ring	
142893	24	22	Locking cover	
5002076	25	22	Screw	M6S M10 x 20 (8.8)
5023005	26	22	Greaser	M 10 x 1
142894	29	1 PCS	Level Indicator	
5005444	30	1 PCS	• Stop screw	S6SS M8x16
142895	31	1	Level Indicator,- outer	
5002033	32	1	• Screw	M6S M6x12 (8.8)
5002060	33	1	• Screw	M6S M8x12 (8,8)
142896	34	1	Level Indicator,- inner	
5022112	35	2	Cover	
246605	40	2 PCS	Support leg	
246606-1	41	2 PCS	Stay	
267632	42	2	Locking Pin	
5016051	43	2	Spring	
5002105	44	2	Screw	M6S M12x45
5011555	45	2	Nut	M12 Loc
5002155	46	2	Screw	M6S 16 x 60 (8.8)
5011569	47	2	Nut	
5046008		1	Paint	Black

© 2025 Jost